DATA TECHNOLOGY

Instruction Manual

Data Logger
NivuLink Micro II / NivuLink Micro II Ex

Firmware Version: 1.6.x

Revised Instruction Manual

Document Revision 11 / 02.07.2025

Original Instruction Manual: German / Rev. 11 / 24.10.2024

measure analyse optimise

NIVUS GmbH • Im Taele 2 • 75031 Eppingen, Germany • www.nivus.com
Phone: +49 7262 9191-0 • Fax: +49 7262 9191-999 • info@nivus.com

NIVUS AG

Burgstrasse 28
8750 Glarus, Switzerland
Phone +41 55 6452066
Fax +41 55 6452014
info@nivus.ch
www.nivus.ch

NIVUS Austria

Mühlbergstraße 33B
3382 Loosdorf, Austria
Phone +43 2754 5676321
Fax +43 2754 5676320
austria@nivus.com
www.nivus.com

NIVUS Sp. z o.o.

Ul. Boleslawa Krzywoustego 4
81-035 Gdynia, Poland
Phone +48 58 7602015
biuro@nivus.pl
www.nivus.pl

NIVUS France

28 rue de Londres
75009 Paris, France
Phone +33 1 89708767
info@nivus.fr
www.nivus.fr

NIVUS Ltd., United Kingdom

Unit 2D Middlemarch 4020
Middlemarch Business Park
Siskin Parkway East
Coventry, CV3 4SU
Phone +44 8445 332883
nivusUK@nivus.com
www.nivus.com

NIVUS Middle East (FZE)

Prime Tower
Business Bay Dubai
31st floor, office C-3
P.O. Box: 112037
Phone +971 4 4580502
middle-east@nivus.com
www.nivus.com

NIVUS Korea Co. Ltd.

#2301 M-Dong Technopark IT Center,
32 Songdogwahak-ro, Yeonsu-gu,
INCHEON, Korea 21984
Phone +82 32 2098588
Fax +82 32 2098590
jhkwon@nivuskorea.com
www.nivuskorea.com

NIVUS Vietnam

238/78 Phan Trung Street,
Tan Tien Ward, Bin Hoa City,
Dong Nai Province, Vietnam
Phone +84 94 2623979
jhkwon@nivuskorea.com
www.nivus.com

NIVUS Africa

3rd floor, block no. 3
75th Fadan Area
Abo Rawash Industrial Zone
Giza, Egypt
Phone +20 2 35393975
Fax +20 2 35393976
sales@nivusaf.com
www.nivus.com

NIVUS Technologies India Pvt. Ltd.

600032 Chennai
Tamil Nadu
India
Phone +91 44 40652811
india@nivus.com
www.nivus.in

Copyrights and Property Rights

The contents of this document including tables and drawings are proprietary to NIVUS GmbH and are not to be reproduced or copied without express written permission.

Violations oblige to compensation.

Copyright

This instruction manual - even in parts - may exclusively be copied or translated in any other way with the express written consent of NIVUS GmbH.

Translation

If the device is sold to a country in the European Economic Area this instruction manual must be translated into the language of the country in which the device is to be used.

Should the translated text be unclear, the original instruction manual (German) must be consulted or a member company of the NIVUS-Group must be contacted for clarification.

Copyright

No part of this publication may be reproduced, transmitted, sold or disclosed without prior permission. All rights reserved.

Names

The use of general descriptive names, trade names, trademarks and the like in this manual does not entitle the reader to assume they may be used freely by everyone. They are often protected registered trademarks even if not marked as such.

Revision History

Rev.	Modifications	Editor	Date
11	NIVUS addresses updated; Chap. "19.1 NivuLink Micro II": number of measuring cycles updated; in Chap. "41.6 Menu Operating Mode" important information added: "In the "Event Interval" cycle, an increased energy requirement can lead to significantly shorter service lives.“; Chap. "42.3.1 NIVUS MODBUS TCP/RTU Application Interface for NivuLink Micro II" added	MoG	02.07.2025
10	Communication with LoRa incorporated; Title page updated (device images); NIVUS addresses updated; Chap. "12 Scope of Delivery", "17 Product Structure and Overview" and "20.1 Product Structure" updated; Chap. "23 Opening closing the Data Logger Enclosure" changed; Chap. "29.3 Sensor Connection" updated: conductor length adapted from 55 mm to 180 mm and cable clip not applicable; Chap. "38.2.4 Menu – Communication" complemented; Chap. "42.2 LoRaWAN" added; Chap. "Approvals and Certificates" updated minor changes in wording and layout	MoG	09.07.2024
09	NIVUS addresses updated; Chap. "12 Scope of Delivery", "23.1 Open / Close Non-Ex Data Logger", "23.2 Open / Close Ex Data Logger", "29.3 Sensor Connection" and "29.4 Connecting the Rain Gauge" supplemented; Chap. "Approvals and Certificates" updated	MoG	26.02.2024
08	Instructions extended at the relevant points to include the data logger with rechargeable battery operation; Incorporation of the plastic enclosure for the Ex data logger; title page updated; Chap. "1 Device Definition NivuLink Micro II / NivuLink Micro II Ex" added; Chap. "2.1 Applicable Documentation" updated; Chap. "3.1.1 Data Logger" supplemented; Chap "3.1.3 Rechargeable Battery" added; ; Chap. "3.3 Interfaces", "4.2.2 Special/Type-Related (Ex-relevant, Battery, Cleaning)", "7 Disclaimer", "9 Ex Protection", "12 Scope of Delivery", "17 Product Construction and Overview", "18.1 Nameplates NivuLink Micro II / NivuLink Micro II Ex", "19 Specifications", "20 Equipment/Device Versions" and "22 General Information on Installation" updated; Chap. "23 Opening / Closing the Data Logger Enclosure" and "24 Fastening the Data Logger" supplemented; Chap. "25 Prepare, insert / change SIM card" and "26 Antenna Installation" updated; Chap. "27.3 Connecting an external Power Supply (only in non-Ex areas)" added; Chap. "29.1 Terminal Wiring", "29.3 Connecting Sensors", "29.4 Connecting the Rain Gauge", "33.3 Menus", "37.2 Change Access Data (User Name/Password)", "37.3 Loss of Access Data", "38.2.2 Menu – Data", "38.2.3 Menu – System", "38.2.5 Menu – Battery", "39.2 Menu Inputs", "39.3 Menu Digital Output" and "39.4 Menu Diagnostics" updated; Chap. "41.4 Menu Error Messages", "41.6 Menu Operation Mode", "42.1.1 Provider", "42.1.6 Ping" and "42.1.7 MQTT" updated and supplemented; Chap. "42.1.9 E-Mail (only with licence)" and "43 Parameter Menu Battery" updated; Chap. "45.2.3 Recharging / Replacing the rechargeable Battery" and "48.1 Replacing the Battery" updated; Chap. "48.2 Replacing the rechargeable Battery" added; Chap. "49	MoG	31.10.2023

	Accessories" and Index supplemented; Chap. "Approvals and Certificates" updated; minor changes in text and layout		
07	Revision skipped	MoG	---
06	Revision of the entire manual due to the transformation of the NivuLink Micro into the 2nd generation: NivuLink Micro II	MoG	11.07.2022
01…05	Revision of the manual for the 1st generation	KG	Various
00	New creation of the manual for the 1st generation	KG	25.10.2018

Table of Contents

Copyrights and Property Rights 3

Revision History 4

Table of Contents 6

General 11

1 Device Definition NivuLink Micro II / NivuLink Micro II Ex....11
2 About this Manual....11
2.1 Applicable Documentation....11
2.2 Signs and Definitions used....12
2.3 Abbreviations used....12
2.3.1 Colour code for wires and single conductors....12
2.3.2 Abbreviations, common....12
3 Connections and Control Elements....12
3.1 Power Supply....12
3.1.1 Data Logger....12
3.1.2 Batteries....13
3.1.3 Rechargeable battery....13
3.2 Control Elements of the NivuLink Micro II....14
3.3 Interfaces....15

Safety Instructions 16

4 Used Symbols and Signal Words....16
4.1 Information on the Valuation of Accident Levels....16
4.2 Warning Notices on the Device (optional)....17
4.2.1 General....17
4.2.2 Special/type-related (Ex-relevant, battery, cleaning)....17
5 Special safety and Precautionary Measures....18
6 Warranty....19
7 Disclaimer....19
8 Intended Use....20
9 Ex Protection....20
10 Duties of the Operator....22
11 Requirements for the Personnel....23

Delivery, Storage and Transport 24

12 Scope of Delivery....24
13 Inspection upon Receipt....24
14 Storage....24
15 Transport....25
16 Return....25

Product Specification 26

17 Product Construction and Overview....26
17.1 Battery-Operated Non-Ex Data Logger in Enclosure K - Plastic....26

17.2 Battery-Operated Non-Ex Data Logger in Enclosure S - Special Design 27
17.3 Rechargeable Battery-Operated Non-Ex Data Logger in Enclosure K - Plastic 28
17.4 Rechargeable Battery-Operated Non-Ex Data Logger in Enclosure S - Special Design 29
17.5 Battery-Operated Ex Data Logger (only available in Enclosure K - Plastic) 30
17.6 Enclosure dimensions Enclosure K - Plastic 31
17.7 Enclosure Dimensions Enclosure S – Special Design (only for Non-Ex Data Loggers) 31
17.8 Connectable Sensors/Probes 32
18 Device ID 32
18.1 Nameplates NivuLink Micro II / NivuLink Micro II Ex 32
19 Specifications 33
19.1 NivuLink Micro II 33
19.2 Transducers 34
20 Equipment/Device Versions 35
20.1 Product Structure 35
20.2 Add-On Function Licences 36

Functional Description 37

21 Functional Principle 37

Installation and Connection 38

22 General Installation Information 38
22.1 Mounting Place 38
22.2 Gaskets 38
22.3 Cable Glands 39
23 Open / Close the Data Logger Enclosure 39
23.1 Open / close enclosure K - Plastic 39
23.2 Open / close enclosure S - Special Design 41
24 Fastening the Data Logger 42
25 Prepare, insert / change SIM card 46
25.1 Activate PIN 46
25.2 Insert / change SIM card in the data logger 46
25.2.1 Battery-Operated Data Logger 46
25.2.2 Rechargeable Battery-Operated Data Logger 47
26 Antenna Installation 47
27 Electrical Installation/Power Supply 48
27.1 General Information on the Power Supply 48
27.2 Removing/installing the batteries and the rechargeable battery 49
27.3 Connecting an external Power Supply (only in non-Ex areas) 49
28 Installation of Sensors 51
28.1 Sensor Installation Principles 51
29 Connection of Sensors / the Rain Gauge 52
29.1 Terminal Wiring 52
29.2 Cable for Sensor Connection 52
29.3 Connecting Sensors 53

29.4 Connecting the Rain Gauge 55

Commissioning 57

30 Notes to the User 57
31 Lighting System of the Status LED on NivuLink Micro II / NivuLink Micro II Ex 58
32 Connection Setup 60
32.1 General 60
32.2 Windows Operating System 60
33 Menu Control/Overview 62
33.1 Overview Display 62
33.2 Save Parameters 63
33.3 Menus 64

Main Screen 65

34 Functions of the Main Screen 65
35 General Overview 65
36 Display Fields 66
36.1 Display fields input 1…4 66

Setting Parameters 68

37 General Programming 68
37.1 Save Parameters 68
37.2 Change Access Data (User Name/Password) 68
37.3 Loss of Access Data 69
38 Parameter Functions 70
38.1 Main Menu 70
38.2 Functions of the first Menu Level 70
38.2.1 Menu - Application 70
38.2.2 Menu – Data 71
38.2.3 Menu – System 71
38.2.4 Menu - Communication 72
38.2.5 Menu - Battery 73
38.2.6 Menu – Alarm (only in connection with menu Data Transmission) 73
39 Parameter Menu Application 74
39.1 Menu Measurement Place 74
39.2 Menu Inputs 75
39.3 Menu Digital Output 78
39.4 Menu Diagnostics 80
40 Parameter Menu Data 82
40.1 Menu Trend 82
40.2 Menu Data Memory 84
41 Parameter Menu System 86
41.1 Menu Information 86
41.2 Menu Country Settings 87
41.2.1 (Operating) Language 87
41.2.2 Date Format 87
41.2.3 Units 87

41.2.4 Data Units 88
41.3 Menu Time/Date 89
41.4 Menu Error Messages 90
41.5 Menu Service 91
41.5.1 Service Level 91
41.5.2 Restart 91
41.5.3 Powerdown 91
41.5.4 Parameter Reset 91
41.5.5 Feature Unlock 92
41.5.6 Update NivuLink Micro II 94
41.6 Menu Operating Mode 95
42 Parameter Menu Communication 97
42.1 Menu Data Transmission 97
42.1.1 Provider 97
42.1.2 Modem State 98
42.1.3 GPS 99
42.1.4 SIM Card 99
42.1.5 DNS 99
42.1.6 Ping 99
42.1.7 MQTT 99
42.1.8 FTP (only with licence) 101
42.1.9 E-Mail (only with licence) 102
42.1.10 Positioning by means of GPS 103
42.2 LoRaWAN 104
42.3 Modbus 110
42.3.1 NIVUS MODBUS TCP/RTU Application Interface for NivuLink Micro II 112
42.3.1.1 Introduction 112
42.3.1.2 Description Application Level 112
42.4 HTTP 113
43 Parameter Menu Battery 113
44 Parameterisation Menu – Alarm (only in connection with menu Data Transmission) 115
44.1 Menu >Alarm< / >Battery (12V)< 115
44.2 Menu >Alarm< / >Temperature< 116
44.3 Menu >Alarm< / >Input x< 117

Maintenance and Cleaning 118

45 Maintenance 118
45.1 Maintenance Interval 118
45.2 Maintenance Tasks 119
45.2.1 Clean, check and replace Seals 119
45.2.2 Replacing Batteries 119
45.2.3 Recharging / Replacing the rechargeable Battery 120
45.3 Customer Service Information 120
46 Cleaning 121
46.1 Data Logger 121
46.2 Transducers 121
47 Dismantling/Disposal 121
48 Installation of Spare Parts and Wearing Parts 122
48.1 Battery Replacement 122

48.2 Rechargeable Battery Replacement 123
49 Accessories 124

Index **126**

Open Source Software **128**

50 List of Sources of the Licences and Codes used 128

Approvals and Certificates **129**

General

1 Device Definition NivuLink Micro II / NivuLink Micro II Ex

The both data loggers named on the title page are part of the NivuLink Micro II family. Both are manufactured in different versions. This diversity of versions ensures that the most suitable variant for your application and use can be put together and ordered.

All variants that may not be used in Ex zones are classified under **NivuLink Micro II**.
Type key: NLG02xxxx**0**xx ("x" is in each case a placeholder for different versions).

While the **NivuLink Micro II Ex** can be used in Ex zone 1 and has the type code NLG02xxxx**E**xx ("x" is in each case a placeholder for different versions).

⇨ For details about this see. Chap "20.1 Product Structure".

2 About this Manual

Important

READ CAREFULLY BEFORE USE.

KEEP IN A SAFE PLACE FOR LATER REFERENCE.

This instruction manual is for the NivuLink Micro II / NivuLink Micro II Ex data loggers and serves their intended use. This instruction manual is oriented exclusively to qualified expert personnel.

Read this instruction manual carefully and completely prior to installation or connection since it contains relevant information on this product. Observe the notes and particularly follow the warning notes and safety instructions.

If you should have problems to understand information contained within this instruction manual either contact a member company of the NIVUS group or one of the distributors for further support. The member companies of the NIVUS group cannot be held responsible for damage to persons or material due to incorrectly understood information in this instruction.

2.1 Applicable Documentation

For the installation and operation of the complete system extra instruction manuals or technical descriptions may be required apart from this manual.

- Instruction manuals for intelligent i-Series sensors
- Technical Description for für Pressure and Level probes:
  NivuBar Plus II, NivuBar G II and HydroBar G II
- Technical Description for für Pressure and Level probes:
  AquaBar BS, AquaBar II and UniBar E II
- Technical Description for für Pressure and Level probes:
  NivuBar H III
- Instruction manual measurement device Rain Gauge Type RM200 / RM202

These manuals are provided with the auxiliary units or sensors and/or are available as download on the NIVUS homepage.

2.2 Signs and Definitions used

Representation	Meaning	Remarks
➲	(Action) Step	Execute action steps. Should action steps be numbered observe the specified order of the steps.
⇨	Cross-reference	Refers to further or more detailed information.
	Refers to a documentation	Refers to an accompanying documentation.
>Text<	Parameter or menu	Indicates a parameter or a menu that is to be selected or is described.

Tab. 1 Structural elements within the manual

2.3 Abbreviations used

2.3.1 Colour code for wires and single conductors

The abbreviations of colours for wire and single conductor labelling follow the international colour code according IEC 60757.

BK	Black	BN	Brown	RD	Red
OG	Orange	YE	Yellow	GN	Green
BU	Blue	VT	Violet	GY	Grey
WH	White	PK	Pink	TQ	Turquois
GNYE	Green/Yellow	GD	Gold	SR	Silver

2.3.2 Abbreviations, common

The following device/subject-related abbreviations are used within the document:

NLG02 NivuLink Micro II

3 Connections and Control Elements

3.1 Power Supply

3.1.1 Data Logger

The power supply for the NivuLink Micro II (Fig. 3-1) is provided by batteries (Fig. 3-1 Fig. 1 Pos. 1) or rechargeable batteries (Fig. 3-1 Fig. 2 Pos. 1), depending on the type.

Ex devices can only be supplied by standard batteries, not by rechargeable batteries.

Alternatively, the **non-Ex data logger** can be connected and supplied externally with 12 V via the voltage terminals (Fig. 3-1 Pos. 2) behind the separating wall.

The **Ex data logger** can **only** be supplied externally via an **intrinsically safe** power supply unit / supply. In this case, the connection values (U_i / I_i / P_i for the "alternative external supply") according to the type examination certificate must be **necessarily** observed.

⇨ See Type Examination Certificate in Chap. "Approvals and Certificates".

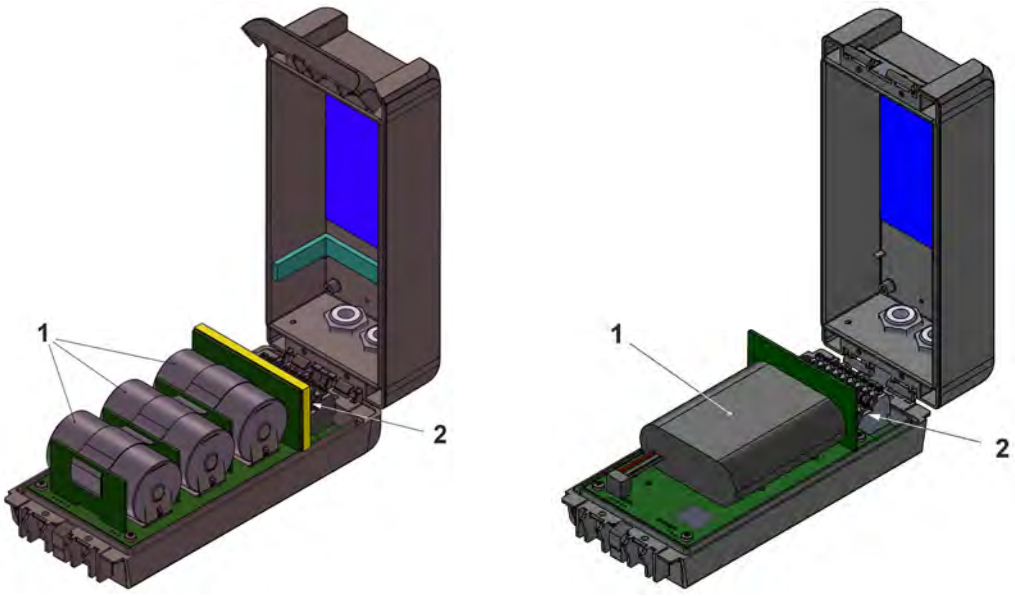

Fig. 3-1 Power supply by batteries / rechargeable batteries (here: in enclosure S - special design)

3.1.2 Batteries

The data logger for battery operation requires three batteries.

The batteries can be purchased from a supplier other than NIVUS. However, only batteries approved by NIVUS are permitted (see Chap. "19 Specifications" and "48 Installation of Spare Parts and Wearing Parts").

The battery life depends not only on the operating mode and the battery capacity, but also on the ambient temperature, any battery batch tolerances, the reception quality at the installation site, etc.

Standard batteries are not rechargeable

*The batteries **cannot** be recharged.*

Storage tips for the batteries

By basically storing and using the batteries at non-critical temperatures (such as room temperature) and storing them dust-free, clean and dry, their capacity can be maintained for longer.
This means that even remote data transmission can often still work well at values in the lower capacity range.

3.1.3 Rechargeable battery

The data logger for rechargeable battery operation requires one rechargeable battery.

Permissible rechargeable batteries see Chap. "19 Specifications" and "48 Installation of Spare Parts and Wearing Parts".

The rechargeable battery life depends not only on the operating mode and the capacity, but also on the ambient temperature, any rechargeable battery batch tolerances, the reception quality at the installation site, etc.

Rechargeable batteries are rechargeable with the NLG02 ZLAD charger from NIVUS.

Storage tips for the rechargeable batteries

By basically storing and using the rechargeable batteries at non-critical temperatures (such as room temperature) and storing them dust-free, clean and dry, their capacity can be maintained for longer.
This means that even remote data transmission can often still work well at values in the lower capacity range.

3.2 Control Elements of the NivuLink Micro II

The NivuLink Micro II is activated by the reed contact (status LED) on the front. This is done by the enclosed ring magnet *ZUB0 NFM MAGNET* (Fig. 3-2).

Beyond that, the NivuLink Micro II has no other control elements. The entire operation and parameterisation is carried out via notebook or PC (using the NIVUS WebPortal if necessary).

Also observe the instruction manuals for the notebook or PC you are using.

Fig. 3-2 Ring magnet

3.3 Interfaces

The data logger is equipped with several interfaces. These are on the front of the enclosure or inside the unit respectively (requires to open the flap).

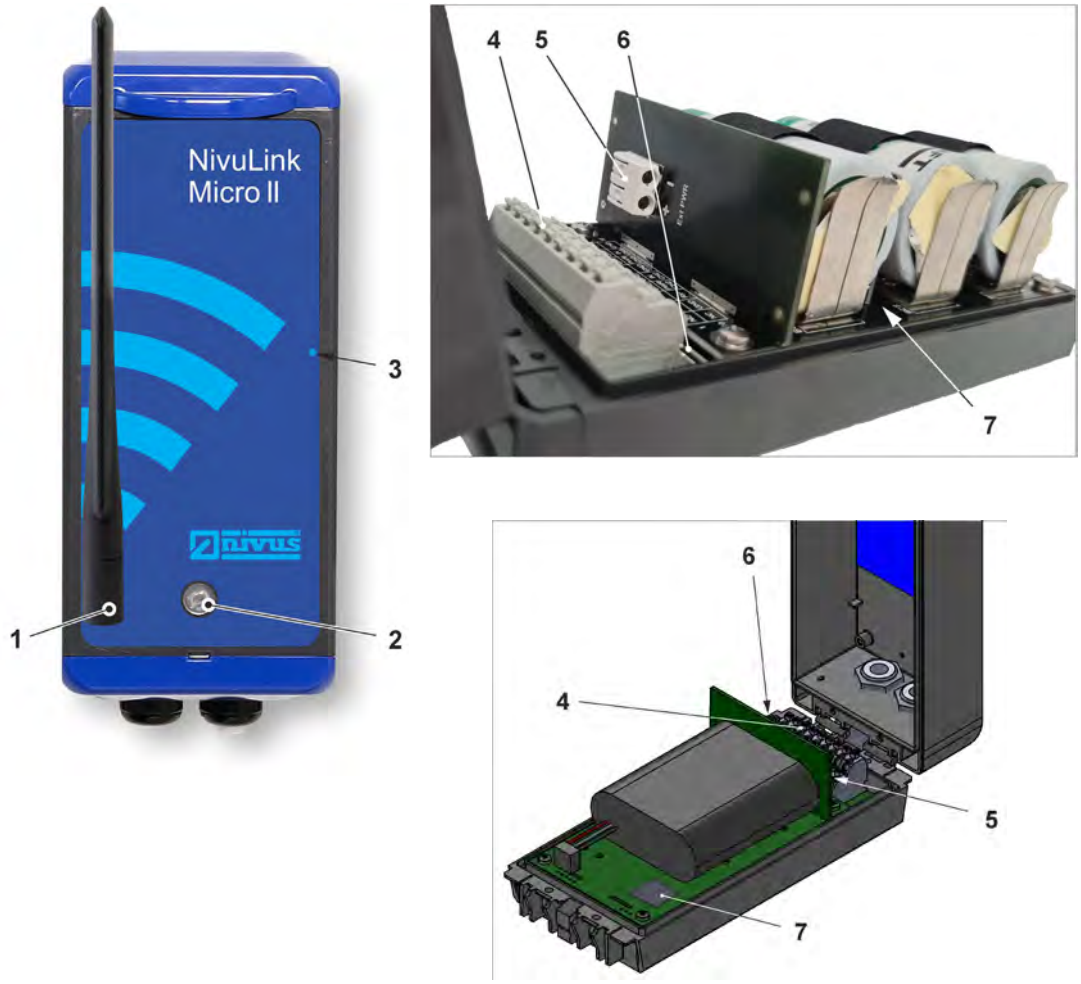

1 SMA antenna socket (for 2G/3G/4G antenna)

2 LED (status display)

3 Reed contact (wake-up via magnet)

4 Terminal block (RS485 interface, universal inputs and digital output)
(see also Fig. 29-1; with open enclosure flap)

5 Voltage terminals 12 V (for external power supply)
(only for non-Ex devices)

6 Micro-USB interface (with open enclosure flap)

7 2G/3G/4G SIM card slot (in conjunction with 2G/3G/4G antenna; with enclosure door open; battery must be removed from separating wall for access when battery is in use)

Fig. 3-3 Available interfaces (here: in enclosure S - special design)

Safety Instructions

4 Used Symbols and Signal Words

4.1 Information on the Valuation of Accident Levels

The general warning symbol indicates the risk of personal injuries or death. In the text section the general warning symbol is used in combination with the signal words described below.

DANGER

Warning in high degree of risk

*Indicates a high-risk, **imminently** hazardous situation which will result in death or serious injury if not avoided.*

WARNING

Warning in medium degree of risk and personal injury

*Indicates a **possible** danger with medium risk which may result in a life-threatening situation or (severe) bodily injury if not avoided.*

CAUTION

Warning in personal injury or property damage

Indicates a possible danger with moderate risk which may result in minor or moderate personal injury or property damage if not avoided.

WARNING

Danger by electric voltage

*Indicates a medium-risk, **imminently** hazardous situation caused by electric shock which will result in death or (serious) injury if not avoided.*

Important Notice

Contains information that needs to be highlighted.
Indicates a potentially harmful situation that may damage the product or something in its environment if not avoided.

Note

Contains tips or information.

4.2 Warning Notices on the Device (optional)

4.2.1 General

General Warning Notice

This symbol refers the operator or user to content in this manual.
Consideration of the information contained herein is necessary to maintain the protection provided by the unit for installation and in operation.

Protective earth connection

This symbol refers to the protective conductor terminal of the device.
Depending on the type of installation, the unit may only be operated with a suitable protective earth connection in accordance with applicable laws and regulations.

4.2.2 Special/type-related (Ex-relevant, battery, cleaning)

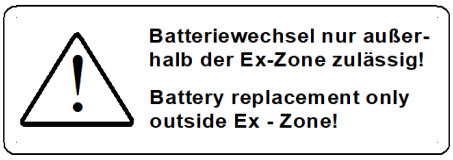

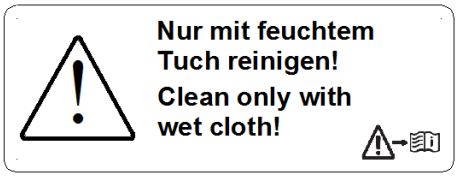

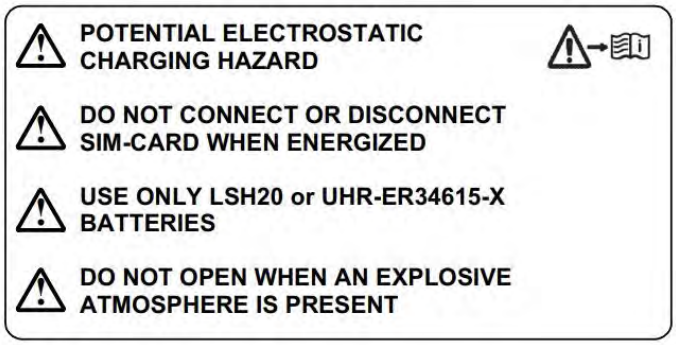

5 Special safety and Precautionary Measures

When working with the NIVUS equipment, the following safety and precautionary measures must be observed and followed generally and at all times. These warnings and notes are not repeated for each description within the document.

WARNING ***Check danger due to explosive gases***

Before starting assembly, installation and maintenance work, be sure to check that all regulations on safety at work have been observed and that there is no possible risk of explosive gases. Use a gas warner for the check.

When working in the sewer system, make sure that no electrostatic charge can occur:

- *Avoid unnecessary movements to reduce the building-up of static charges.*
- *Discharge any static electricity present on your body before you start installing the sensor.*

Disregarding may result in personal injury or damage to the system.

WARNING ***Open the device only out of Ex areas***

Do not open, service or repair in an area where an explosive atmosphere is present.

WARNING ***Germ Contamination***

Due to the frequent use of the sensors in the waste water sector, parts can be contaminated with dangerous germs. Therefore, appropriate precautions must be taken when coming into contact with cables and sensors.

Wear protective clothing.

WARNING ***Observe Occupational Safety Regulations!***

Before and during mounting works, compliance with all work safety regulations must always be ensured.

Disregarding may lead to personal injury.

WARNING ***Do not disable Safety Devices!***

It is strictly forbidden to disable the safety devices or to change their mode of operation.

Disregarding may result in personal injury or damage to the system.

WARNING ***Disconnect the System from Mains Power***

Disconnect the instrument from mains power (if connected) before you begin maintenance, cleaning and/or repair works (qualified personnel only).

Disregarding may lead to electric shock.

Commissioning only by qualified Personnel

The entire measuring system may only be installed and commissioned by qualified personnel.

Special conditions for outdoor use

The products of the NIVUS GmbH for outdoor use have extensive protection against the ingress of dust and moisture. If these products are connected to the power supply or to the sensors / actuators by cables with plugs instead of permanently installed wiring, then there is a risk of dirt, dust and moisture penetrating the plug and socket. It is the operator's responsibility to protect the plug and socket from the ingress of dirt, dust and moisture and to comply with local safety regulations.

6 Warranty

The device was functionally tested prior to shipping. When used for the intended purpose (see Chap. "8 Intended Use") and in compliance with the instruction manual, the applicable (see Chap. "2.1 Applicable Documentation") and the safety information and instructions contained therein, no functional restrictions are to be expected and flawless operation should be possible.

⇨ Please also refer to the following Chapter "7 Disclaimer".

Limitation of Warranty

In case of disregarding the safety notes and instructions in this document, the companies of the NIVUS-Group reserve the right to limit the warranty.

7 Disclaimer

The companies of the NIVUS-Group assume no liability

- for consequential damages resulting from a change in this document. The companies of the NIVUS-Group reserve the right to change the contents of the document including this disclaimer without prior notice.
- for personal injury or damage to property resulting from **failure to comply** with the **applicable regulations**. For connection, commissioning and operation of the devices/sensors, all information and higher-level legal regulations of the country (in Germany e.g. the VDE regulations), such as valid Ex regulations as well as the safety and accident prevention regulations applicable to the respective individual case shall be observed.
- for personal injury or damage to property resulting from **improper handling**. For safety and warranty reasons, all work on the equipment that goes beyond the installation and connection measures may only be carried out by NIVUS personnel or by persons or companies authorised by NIVUS.
- for personal injury or damage to property resulting from the operation of the devices/sensors in a **technically faulty** condition.
- for personal injury or damage to property resulting from **improper use**.
- for personal injury or damage to property resulting from **failure to observe** the **safety instructions** in this instruction manual.
- for missing or incorrect readings due to **improper installation or faulty parameterisation/programming** and for any consequential damage resulting therefrom.

No liability for data loss

If the device should be damaged and the data is not saved correctly, the companies of the NIVUS group of companies are not liable for data loss of any kind. The risk is the sole responsibility of the operator.

8 Intended Use

Note

The device is intended exclusively for the purpose mentioned below. Any other use beyond this, any conversion or modification of the instrument without written agreement with the companies of the NIVUS-Group is considered improper use.
The companies of the NIVUS-Group are not liable for any damage resulting from this.
The operator alone bears the risk.

The data loggers NivuLink Micro II / NivuLink Micro II Ex incl. associated sensors are intended for the cyclical or event-based determination of measurement data, the storage of the collected values and the remote transmission to (among others) a central server.

The devices are designed and produced according to the current state of the art and the recognised safety rules at the time of publication of this document. Nevertheless, risks of personal injury or damage to property cannot be completely ruled out.

The permissible maximum limit values in Chapter "19 Specifications" must be observed. All cases of use deviating from these limit values, which have not been approved by NIVUS GmbH in writing, are excluded from the liability of the NIVUS-Group.

9 Ex Protection

Fig. 9-1 Ex device

The self-sufficient data logger NivuLink Micro II Ex (Fig. 9-1) incl. associated sensors is designed for use in areas with explosive atmospheres of zone 1.
The following conditions must be observed:

- The enclosure of the data logger may only be opened **outside** the Ex area.
- Maintenance and repair shall only be carried out **outside** the Ex area.
- **Rechargeable batteries** must **not** be used in Ex areas.
- Batteries may only be removed/installed and charged only **outside** the Ex area.
- In general, only batteries approved by NIVUS may be used **within** the Ex area.

- **Special conditions** for use according to type examination certificate paragraph (17):
  - The data logger NivuLink Micro II Type NLG02xxxxExx must be installed and used in such a way that electrostatic charges caused by operation, maintenance and cleaning are **excluded**.
  - If the data logger NivuLink Micro II Type NLG02xxxLExx and the data logger NivuLink Micro II Type NLG02xxxKExx are installed in a potentially explosive atmosphere, they must be **protected** from UV radiation.
  - Inserting and removing the "SIM card" is only permitted if there is **no** explosive atmosphere.
    The connection to the "USB socket" is only permitted **outside** the potentially explosive atmosphere.
  - The supply batteries may only be changed **outside** the potentially explosive area.
  - Only **approved** batteries in accordance with this instruction manual may be used. See Chap. "48.1 Battery Replacement".
  - The data logger NivuLink Micro II Type NLG02xxxLExx and the data logger NivuLink Micro II Type NLG02xxxAExx must be set up in such a way that a mechanical hazard can be **excluded**.
  - For reading out the measured values, an **Industrial USB Isolator** (e.g. Type FIT0860) with 1500 V isolation voltage is provided between the USB interface of the device connected to the data logger (laptop/PC or similar) and the USB socket of the data logger.
    The power supply of the connected device (laptop/PC or similar) must be connected to a power supply unit with SELV/PELV safety extra-low voltage.
    A battery-powered laptop/PC is considered a SELV/PELV device.

Approval for Data Logger

⇨ See Chap. "19 Specifications".

Validity of the Ex Approval

The Ex approval is only valid in conjunction with the corresponding marking on the nameplate of data logger and the sensors/probes.

Declarations of Conformity and Test Certificates

For installation and commissioning, the EU declarations of conformity and test certificates of the approving body must be strictly observed.

Ex Approval for Sensors

The Ex approvals of the sensors/probes are enclosed with the instructions:

- *Instruction manuals for intelligent i-Series sensors*
- *Technical Description for für Pressure and Level probes: NivuBar Plus II, NivuBar G II and HydroBar G II*
- *Technical Description for für Pressure and Level probes: AquaBar BS, AquaBar II and UniBar E II*
- *Technical Description for für Pressure and Level probes: NivuBar H III*

10 Duties of the Operator

Strictly observe and comply with guidelines and requirements

In the EEA (European Economic Area), the national transposition of the Framework Directive (89/391/EEC) as well as the associated individual directives and, in particular, the Directive (2009/104/EC) concerning the minimum safety and health requirements for the use of work equipment by workers at work, as amended, must be observed and complied with.
In Germany, the Ordinance on Industrial Safety and Health must be complied with.

Obtain the local operating licence and observe the associated conditions. In addition, you must comply with environmental protection requirements and local legal requirements for the following:

- Safety of personnel (accident prevention regulations)
- Safety of work equipment (protective equipment and maintenance)
- Product Disposal (Waste Management Act)
- Materials Disposal (Waste Management Act)
- Cleaning (Cleaning Agents and Disposal)

Connections

As the operator, before activating the device, make sure that the local regulations (e.g. for the electrical connection) have been observed during installation and commissioning.

Keep the Instruction Manual for future Reference

Keep the instruction manual in a safe place and ensure that it is always available and can be consulted by the user of the product.

Hand over the Instruction Manual

When selling the data logger, this instruction manual must be handed over with it. The manual is part of the standard delivery.

11 Requirements for the Personnel

Installation, commissioning and maintenance may only be carried out by personnel who fulfil the following conditions:

- Qualified personnel with appropriate training
- Authorisation by plant operator

Qualified Personnel

in the sense of these instructions or the warnings on the product itself are persons who are familiar with the installation, assembly, commissioning and operation of the product and who have the qualifications appropriate to their job, such as

I. Training and instruction or authorisation to switch circuits and devices/systems on and off, to earth and to label them in accordance with the standards of safety technology.

II. Training or instruction in accordance with safety technology standards in maintenance and use of appropriate safety equipment.

III. First Aid Training

Delivery, Storage and Transport

12 Scope of Delivery

The standard delivery of the NivuLink Micro II / NivuLink Micro II Ex comprises:

- Data logger NivuLink Micro II / NivuLink Micro II Ex (possibly incl. three inserted batteries or rechargeable battery) (variant/version according to delivery documents)
- Rod antenna (bendable) *NLF0 ANTENNE*
- Ring magnet *ZUB0 NFM MAGNET* (Fig. 3-2)
- Jumper (short circuit bridge) (use only when connecting a Rain Gauge *RMT0*)
- 2x sealing plugs/locking bolts (diameter 9 mm) (inserted into the screw connections on delivery)
- Cable gland (various)
- USB cable *NLG0 USB KAB1*
- Angled Torx key *NLG0 SCRDR TX20*
- USB isolator, e.g. Type FIT0860 (only for NivuLink Micro II Ex)
- Instruction manual (with declaration of conformity) including all the necessary information for operating the NivuLink Micro II / NivuLink Micro II Ex (printed or as a link to the NIVUS download centre)

Check additional accessories according to the order against the delivery note.

13 Inspection upon Receipt

Check the delivery for completeness and apparent intactness immediately after receipt. Report any transport damage immediately to the delivering freight carrier. Also send a written report to NIVUS GmbH in Eppingen.

Incomplete deliveries must be addressed in writing within two weeks to your responsible representative or directly to the head office in Eppingen.

Observe the two-week deadline

Complaints received later will not be recognised.

14 Storage

Observe the minimum and maximum values for external conditions such as temperature and humidity according to Chapter "19 Specifications".

Protect the instrument from corrosive or organic solvent vapours, radioactive radiation and strong electromagnetic radiation.

Store the device in the original packaging.

➲ To store the device remove the batteries/rechargeable battery.

15 Transport

Protect the NivuLink Micro II / NivuLink Micro II Ex from strong impacts, blows, shocks or vibrations by using appropriate safety measures.

Transport the device in the original packaging.

Otherwise, the same conditions apply with regard to external influences as for storage (see Chap. "14 Storage").

16 Return

In the event of a return, send the unit to NIVUS GmbH in Eppingen carriage paid and in the original packaging.

Items that have not been sufficiently franked will not be accepted!

In general, a return note (incl. RMA return number) must be requested from the NIVUS customer service before returning the goods. Without this RMA number, the incoming goods cannot be assigned accordingly.

⇨ See Chap. "45.3 Customer Service Information".

CAUTION

Returning the data logger with inserted/defective Li-SOCl₂ batteries is not permitted

If the data logger is to be sent to NIVUS for inspection, then only without batteries. Remove the batteries from the battery holder beforehand.

As a general rule, defective batteries must not be shipped individually or in a battery holder in accordance with the Dangerous Goods Regulations (DGR) 61st edition 2020 UN 3090 / 3091 Lithium Metal Batteries A154.

Product Specification

17 Product Construction and Overview

17.1 Battery-Operated Non-Ex Data Logger in Enclosure K - Plastic

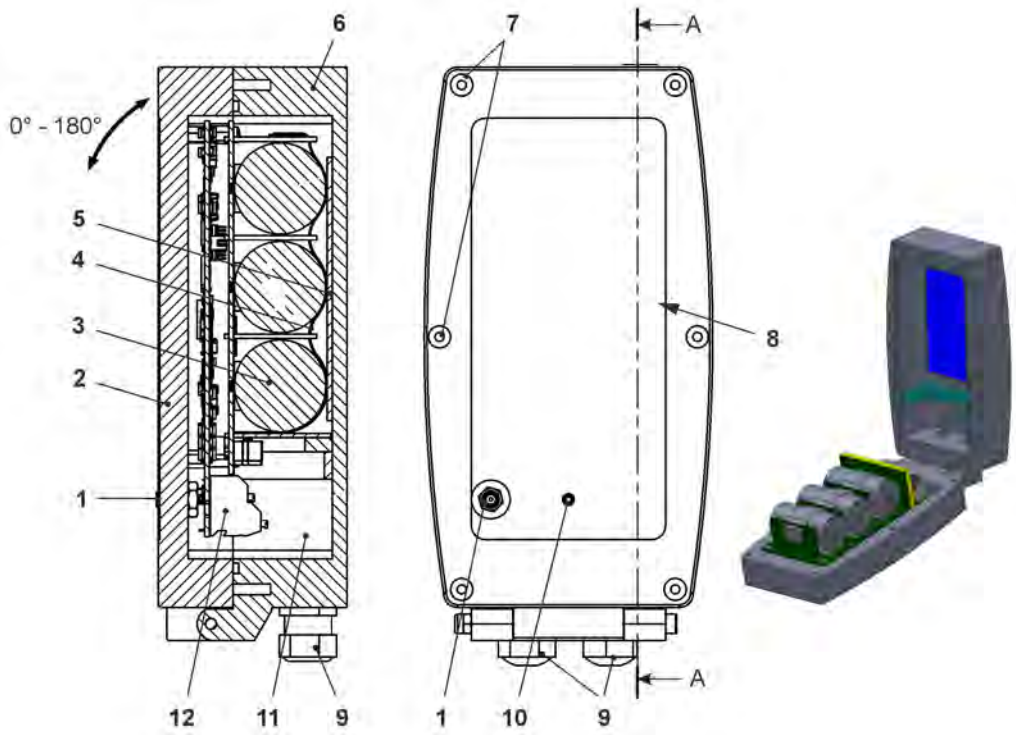

1 2G/3G/4G Antenna socket
2 Enclosure flap with bottom-mounted hinge (opening angle max. 180°)
3 Batteries (3 pcs.)
4 Eyelet strap for securing the batteries (when the enclosure flap is open)
5 Sponge rubber, soft
6 Enclosure (IP68 with closed enclosure flap)
7 Screw plugs (6x) (special design)
8 Reed contact (wake-up via magnet)
9 Cable gland M16 (2x)
10 LED (status display)
11 Terminal compartment
12 Terminal block 18 poles

Fig. 17-1 Device construction NivuLink Micro II Ex with batteries in Enclosure K - Plastic

17.2 Battery-Operated Non-Ex Data Logger in Enclosure S - Special Design

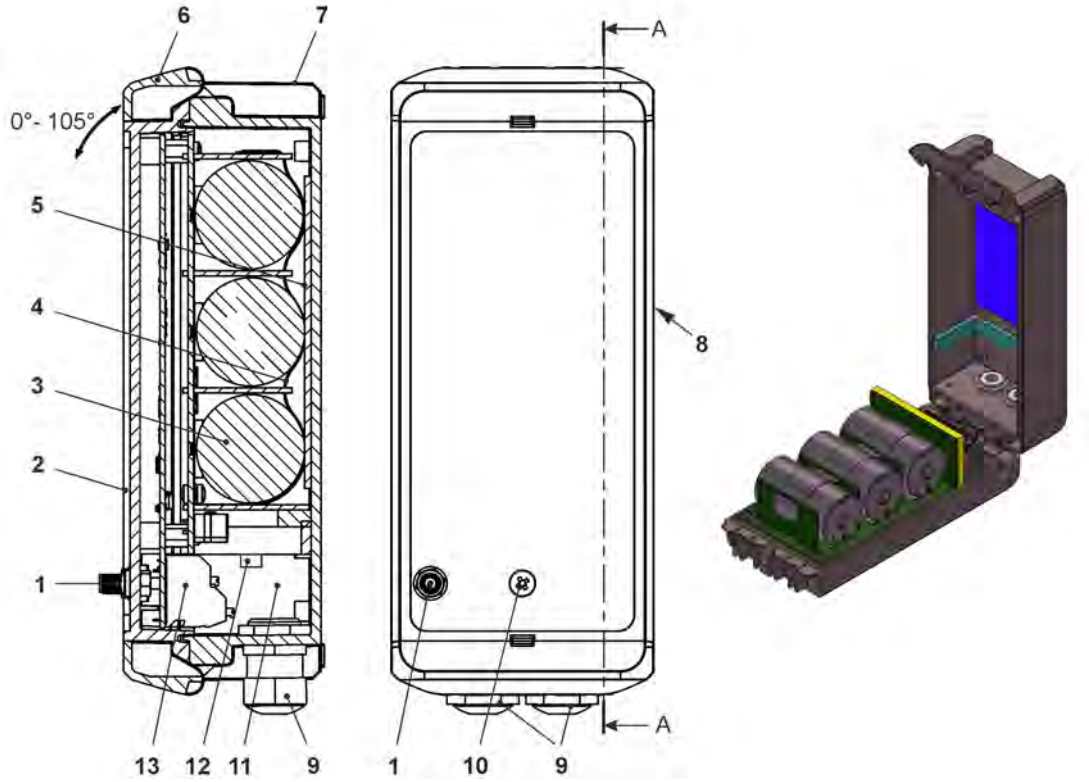

1 2G/3G/4G Antenna socket
2 Enclosure flap (max. opening angle 105°)
3 Batteries (3 pcs.)
4 Eyelet strap for securing the batteries (when the enclosure flap is open)
5 Sponge rubber, soft
6 Enclosure lock
7 Enclosure (IP68 with closed enclosure flap)
8 Reed contact (wake-up via magnet)
9 Cable gland M16 (2x)
10 LED (status display)
11 Terminal compartment
12 Voltage terminals 12 V (for external power supply)
13 Terminal block 18 poles

Fig. 17-2 Device construction NivuLink Micro II Ex with batteries in Enclosure S - Special Design

17.3 Rechargeable Battery-Operated Non-Ex Data Logger in Enclosure K - Plastic

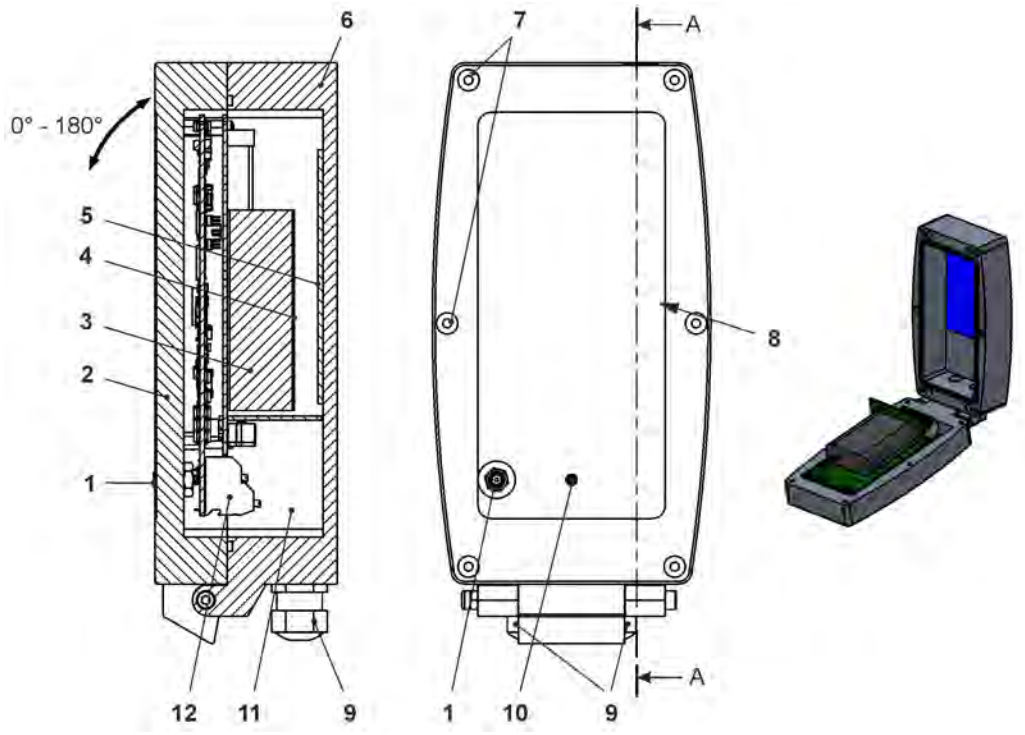

1 2G/3G/4G Antenna socket
2 Enclosure flap (max. opening angle 180°)
3 1x Rechargeable battery
4 Velcro strap for securing the rechargeable battery (when the enclosure flap is open)
5 Sponge rubber, soft
6 Enclosure (IP68 with closed enclosure flap)
7 Screw plugs (6x) (special design)
8 Reed contact (wake-up via magnet)
9 Cable gland M16 (2x)
10 LED (status display)
11 Terminal compartment
12 Terminal block 18 poles

Fig. 17-3 Device construction NivuLink Micro II with rechargeable batteries in Enclosure K - Plastic

17.4 Rechargeable Battery-Operated Non-Ex Data Logger in Enclosure S - Special Design

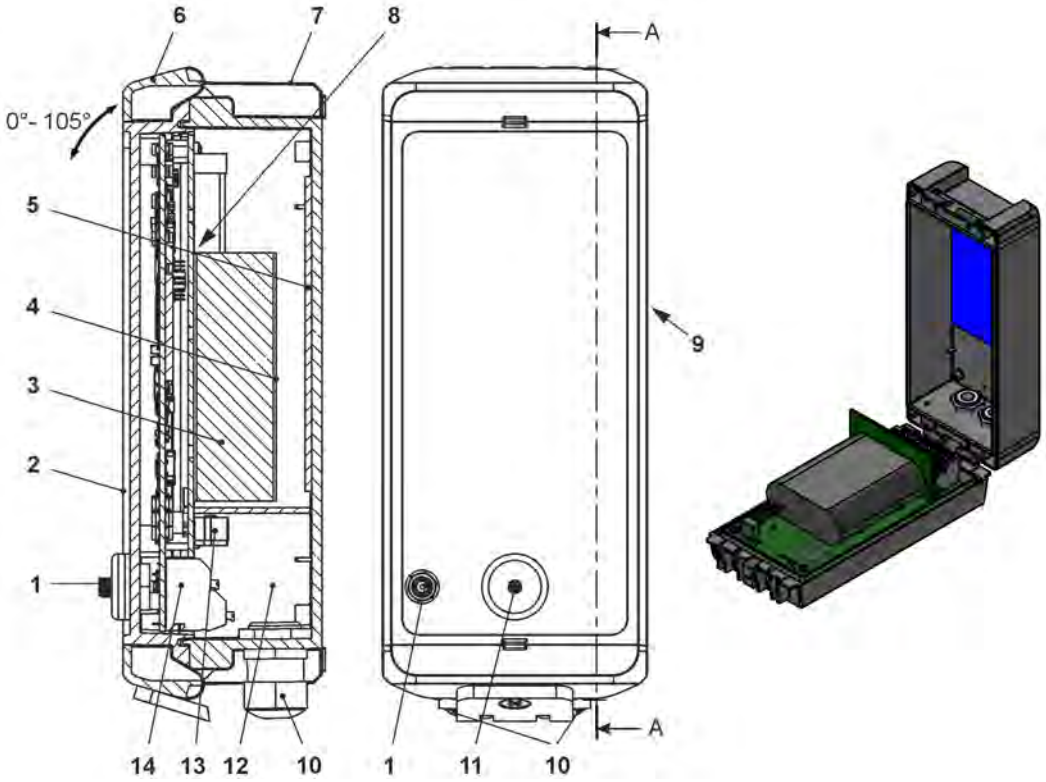

1 2G/3G/4G Antenna socket
2 Enclosure flap (max. opening angle 105°)
3 1x Rechargeable battery
4 Velcro strap for securing the rechargeable battery (when the enclosure flap is open)
5 Sponge rubber, soft
6 Enclosure lock
7 Enclosure (IP68 with closed enclosure flap)
8 Plastic plug for securing the rechargeable battery against slipping
9 Reed contact (wake-up via magnet)
10 Cable gland M16 (2x)
11 LED (status display)
12 Terminal compartment
13 Voltage terminals 12 V (for external power supply)
14 Terminal block 18 poles

Fig. 17-4 Device construction NivuLink Micro II with rechargeable battery in Enclosure S - Special Design

17.5 Battery-Operated Ex Data Logger (only available in Enclosure K - Plastic)

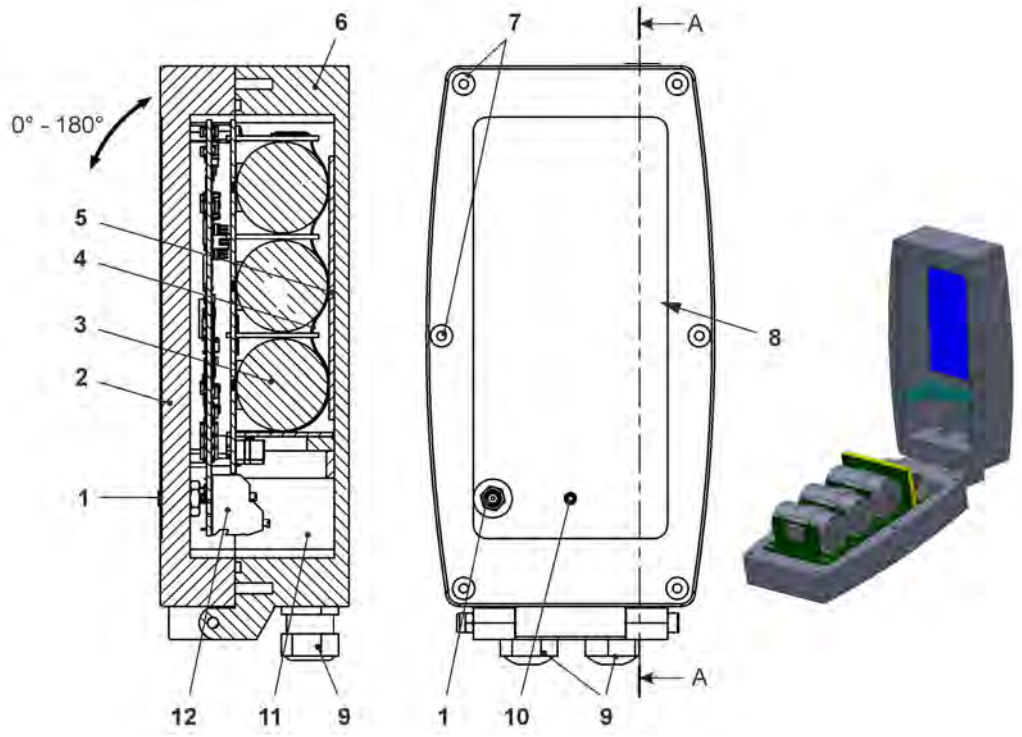

1 2G/3G/4G Antenna socket
2 Enclosure flap with bottom-mounted hinge (opening angle max. 180°)
3 Batteries (3 pcs.)
4 Eyelet strap for securing the batteries (when the enclosure flap is open)
5 Sponge rubber, soft
6 Enclosure (IP68 with closed enclosure flap)
7 Screw plugs (6x) (special design)
8 Reed contact (wake-up via magnet)
9 Cable gland M16 (2x)
10 LED (status display)
11 Terminal compartment
12 Terminal block 18 poles

Fig. 17-5 Device construction NivuLink Micro II Ex with batteries in Enclosure K - Plastic

17.6 Enclosure dimensions Enclosure K - Plastic

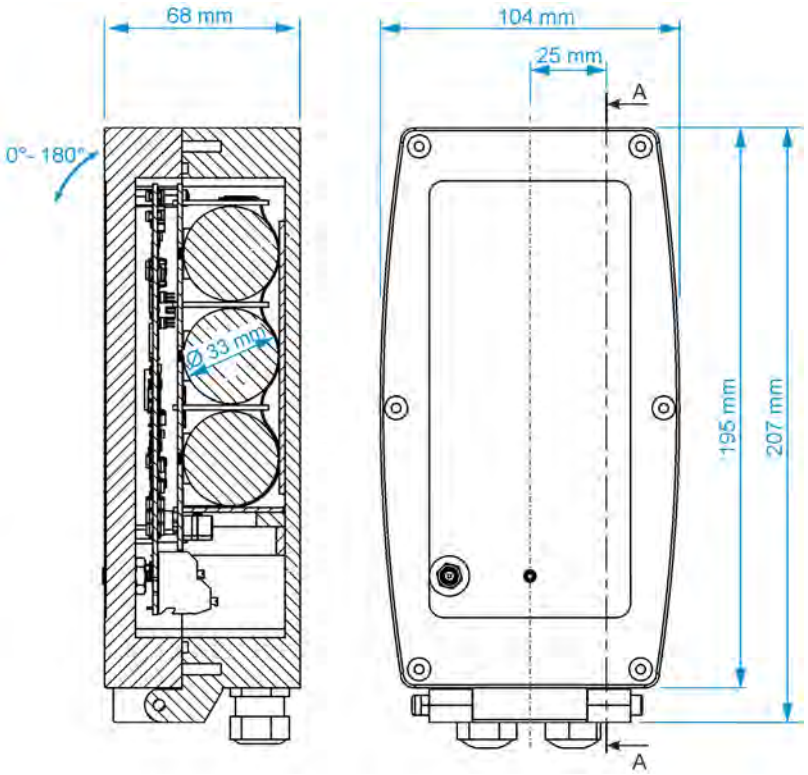

Fig. 17-6 Enclosure K - Plastic for Ex and Non-Ex device version

17.7 Enclosure Dimensions Enclosure S – Special Design (only for Non-Ex Data Loggers)

Fig. 17-7 Enclosure S - Special Design for Non-Ex Device Versions

17.8 Connectable Sensors/Probes

In the following illustration you will find an overview of the connectable level sensors/probes.

1 NivuBar Plus II
2 NivuBar G II
3 NivuBar H III
4 HydroBar G II
5 AquaBar II
6 AquaBar BS
7 UniBar E II (with display)
8 UniBar E II
9 i-Series i-15
10 i-Series i-10
11 i-Series i-6
12 i-Series i-3

Fig. 17-8 Connectable Sensors/Probes

18 Device ID

18.1 Nameplates NivuLink Micro II / NivuLink Micro II Ex

The information in this instruction manual only applies to the device indicated on the title page. The nameplates are attached to the side of the enclosure and contain the following information:

- Name and address NIVUS GmbH
- CE label
- Marking of the series and type with article number and serial number
- Year of manufacture: the first four digits of the serial number refer to the year of manufacture and the week number (2305…..)
- Ex Protection Label
- Ambient conditions in operation

It is important for all queries and spare parts orders that the article number and serial number of the respective device are specified correctly. This is the only way to ensure proper and fast processing.

Fig. 18-1 Nameplate (Part 1) NivuLink Micro II (Example Ex Device)

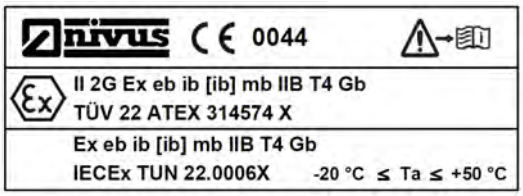

Fig. 18-2 Nameplate (Part 2, only for Ex Devices) NivuLink Micro II Ex

Check nameplates

Check by means of the nameplates whether the supplied device corresponds with your order.

The Declarations of Conformity and the Type Examination Certificate can be found at the end of this instruction manual.

19 Specifications

19.1 NivuLink Micro II

Measurement Principles	4-channel data logger (4x universal input)
Power supply	- **Internal** (depending on device): 3x Battery Li-$SOCl_2$, 3.6 V, type D (s. a. Chap. "48.1 Battery Replacement") 1x Rechargeable battery (Non-Ex version only) - **External** (Non-Ex version only): for battery-operated data logger: 5…15 V DC for rechargeable battery-operated data logger: max. 24.5 V (incl. possible open circuit voltage) - **External** (only Ex device): Intrinsically safe power adapter: U_{max} ≤ 11.7 V / I_{max} ≤ 1.25 A / P_{max} ≤ 14.6 W
Connection data for the Ex device	Connection data NivuLink Micro II Ex for Ex zone 1 II 2G Ex eb ib [ib] mb IIB T4 Gb can be taken from the **Type Examination Certificate Paragraph (15)** in Chap. "Approvals and Certificates".

Enclosure	- Material: Plastic - Weight: approx. 350 g or 1200 g (both incl. batteries) - Protection: IP68 (closed) - Dimensions see Chap. "17.6 Enclosure dimensions Enclosure K - Plastic" or "17.7 Enclosure Dimensions Enclosure S – Special Design (only for Non-Ex Data Loggers)"
Ex Approvals / other Approvals	ATEX: TÜV 22 ATEX 314574 X II 2G Ex eb ib [ib] mb IIB T4 Gb IECEx: TUN22.0006X Ex eb ib [ib] mb IIB T4 Gb
Operation Temperature	Non-Ex device: -20…+80 °C (device without batteries/rechargeable battery) Ex Device: -20 °C ≤ T_a ≤ +50 °C It is essential to observe the corresponding instructions/recommendations of the manufacturers of the batteries/rechargeable batteries used.
Storage Temperature	-30...+80 °C (device without batteries/rechargeable battery)
Max. Humidity	90 %, non-condensing
User Indicator	Status LED (RGB) for indicating the operating status
Operation	Magnetic switch for starting a time-limited online connection; via Micro-USB with notebook or PC
Inputs	4x 0...20 mA / 0…10 V / digital universal input Connection values see Chap. "29.1 Terminal Wiring"
Outputs	1x Micro-USB for read-out of measurement values via Micro-USB cable / USB isolator to a SELV/PELV device 1x Relay output 100 mA / 26 V Connection values see Chap. "29.1 Terminal Wiring"
Storage Cycle	1 min. to 24 hrs., time-cyclical or event-dependent; the possible transmission cycles may differ; details in the respective chapters
Data Memory	Internal; 80,000 measurement cycles
Interfaces	RS485 / Modbus RTU / HART
Data Transmission/ Communication	- Direct connection to notebook/PC via plug-in Micro-USB cable - Via 2G/3G/4G

Tab. 2 Specifications NivuLink Micro II / NivuLink Micro II Ex

19.2 Transducers

The structure and description of the associated sensors as well as their technical data can be found in the corresponding instructions or technical descriptions.

20 Equipment/Device Versions

20.1 Product Structure

The self-sufficient data logger is manufactured in different versions. The table below provides an overview on the currently available different versions.

The version determines the article number. The article number can be found on the name-plate.

Conversely, the exact equipment/device version can be specified on the basis of the article number.

NLG02	NivuLink Micro II Telecontrol gateway with 2G/3G/4G module for transmitting and storing analogue and digital signals; switchable sensor supply; counter function in sleep mode; integrated temperature sensor, incl. rod antenna					
	Number of inputs					
	4 4 Inputs					
		Remote Data Transmission				
		G With internal modem; modem card Global *1				
		L With integrated LoRa modem				
			Power Supply			
			B Batteries (in battery holder)			
			O None (empty battery holder)			
			R Rechargeable battery (only in connection with "ATEX Approval: 0")			
				Version/Enclosure		
				S Enclosure special design (only in connection with "ATEX Approval: 0")		
				K Plastic enclosure		
					ATEX Approval	
					E Ex zone 1	
					0 None	
						Options
						00 None
NLG02	**4**					**00**

*1) Areas of use: Global

Tab. 3 Product Structure

Accessories see Chapter "49 Accessories".

20.2 Add-On Function Licences

The data logger can be equipped with supplementary functions at extra charge.

The following function extensions are currently available as (software) licences:

- FTP/SMTP client for data transmission via FTP server (*NFM LIZENZ FTP*), see Chap. "42.1.8 FTP (only with licence)" and "42.1.9 E-Mail (only with licence)"
- Data transmission extended to determine the data depth (*NFM LIZENZ ERW*) see Chap. "40.2 Menu Data Memory": **>Data Depth<**
- Data transmission expert to determine the data depth (*NFM LIZENZ EXP*) see Chap. "40.2 Menu Data Memory": **>Data Depth<**

The functions are activated according to Chap. "41.5.5 Feature Unlock".

Functional Description

21 Functional Principle

The NivuLink Micro II / NivuLink Micro II Ex is a compact, portable device for detecting, processing, storing and transmitting analogue or digital signals captured via various industrial interfaces. Four universal inputs are available, which can be operated in different analogue or digital modes.

The measurement data of the inputs are temporarily stored in an internal data memory together with the states of the outputs. The stored data is transmitted wirelessly (2G/3G/4G) to a central server such as the NIVUS WebPortal at a freely selectable interval.

This server can be accessed directly with a client on which a web browser is installed.

The integration of higher-level control systems, supplementary data sources such as geoinformation or analysis systems as well as operating software for billing purposes are realised via NIVUS DataKiosk.

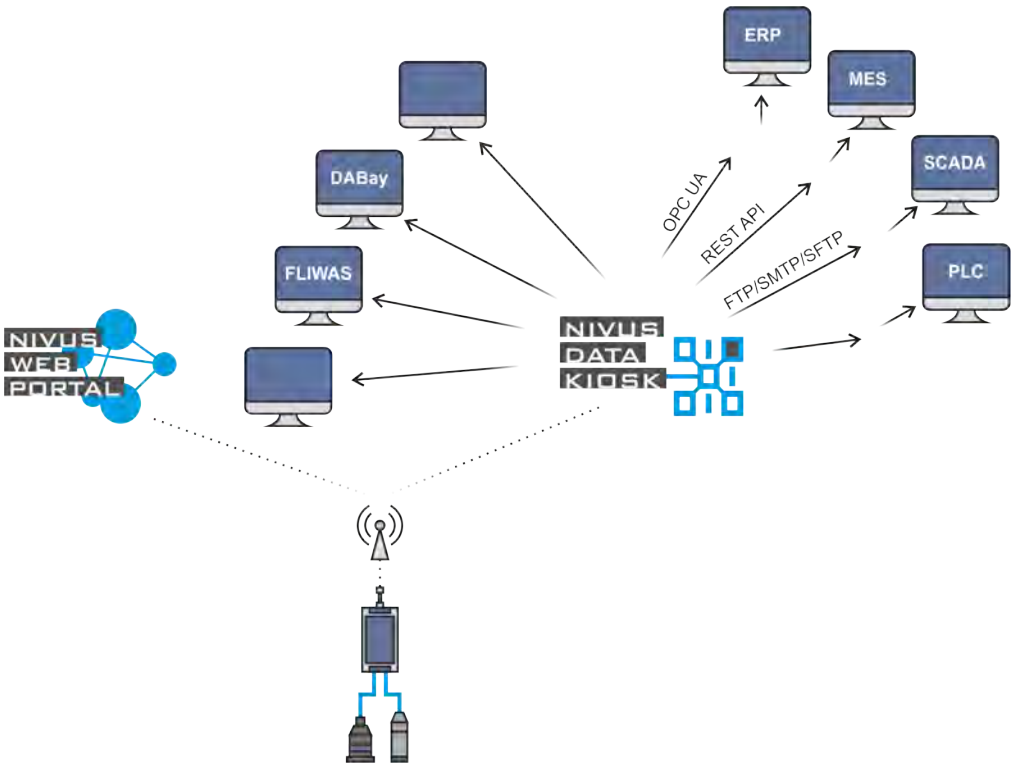

Fig. 21-1 Functional principle of the NivuLink Micro II / NivuLink Micro II Ex

Installation and Connection

22 General Installation Information

WARNING

Check danger due to explosive gases

Before starting assembly, installation and maintenance work, be sure to check that all regulations on safety at work have been observed and that there is no possible risk of explosive gases. Use a gas warner for the check.
When working in the sewer system, make sure that no electrostatic charge can occur:

- *Avoid unnecessary movements to reduce the building-up of static charges.*
- *Discharge any static electricity present on your body before you start installing the sensor.*

Disregarding may result in personal injury or damage to the system.

22.1 Mounting Place

The following precautions must be taken at the mounting place for safe installation:

➲ Protect the data logger from direct sunlight. If necessary, install a sunshade or, in the case of the Ex data logger, a weather protection roof. Although the materials of the enclosures have a certain UV resistance, an aging process still occurs due to permanent direct UV radiation. In the worst case, the Ex device loses its specified protection class and thus its Ex approval. See also Chap. "49 Accessories".

➲ Observe the permissible ambient temperature (see Chap. "19 Specifications").

➲ Do not expose the data logger and the connected sensors to strong vibrations or mechanical shocks.

Necessarily avoid when selecting the mounting place:

- Corrosive chemicals or gases
- Radioactive radiation
- Installation close to footpaths or travel ways

Incorrect Installation or unfavourable Mounting Place

Damage to equipment caused by incorrect installation or the selection of an unfavourable mounting place shall be excluded from the liability of the companies of the NIVUS GmbH.

22.2 Gaskets

➲ Check the gaskets on the enclosure flap.
Before closing the enclosure flap, always make absolutely sure that the gasket is clean and undamaged. Therefore:

- Remove foreign bodies and dirt.
- Replace defective gaskets.
- Treat the seals with silicone grease if necessary.

Gaskets

Damage to equipment caused by leaking or defective gaskets shall be excluded from the liability of the companies of NIVUS GmbH.

See also Chap. "45.2 Maintenance Tasks".

22.3 Cable Glands

➲ Close open, unused cable glands on the underside of the data logger with the sealing plugs/locking bolts to protect against dust, dirt or penetrating liquids before installation. In the case of Ex units, it must also be ensured that the sensor cables are secured underneath the enclosure with the strain relief supplied by NIVUS. See also Chap. "24 Fastening the Data Logger".

The protection class of the closed device is IP68.

Damaged or lost sealing plugs/locking bolts can be reordered from NIVUS at extra costs.

23 Open / Close the Data Logger Enclosure

23.1 Open / close enclosure K - Plastic

Fig. 23-1 Open / close enclosure K - Plastic

➲ Procedure to **open** the enclosure:

WARNING ***Risk of explosion when opening / closing the enclosure in the Ex area***

*The device may only be opened/closed **only outside** the Ex area.*
***Never within** Ex areas.*

CAUTION

Equipment damage due to water

*Before you open the enclosure flap in the rain or in a location with potential water ingress from above, be sure to **protect** the NivuLink Micro II / NivuLink Micro II Ex in a suitable manner against the ingress of moisture.*

Screw plugs 2-step screwed in

The screw plugs are special designs. Some of them have a threadless shaft so that they make a secure connection between the enclosure and the enclosure flap (guaranteeing the protection class) but are also captively secured.

The "2-step" screw-in method described in the following work step 2 also ensures that the threads of the enclosure are not damaged when the enclosure flap is folded down.

1. **Step 1:** Unscrew six screw plugs (Fig. 23-2 Pos. 1 / Fig. 23-3 Pos. 1; special design) from the enclosure (Fig. 23-3 Pos. 3) until they can move freely in the bore of the housing flap (Fig. 23-2 Pos. 2 / Fig. 23-3 Pos. 2) but cannot fall out.
   Step 2: "Unscrew" the screw plugs in the threads of the housing flap 2...3 turns further until they are captively secured. This prevents the screw plugs from colliding with the enclosure and also prevents damage when the enclosure flap is folded down.
2. Carefully fold down the housing flap (Fig. 23-2 Pos. 2 / Fig. 23-3 Pos. 2) to protect the hinge (do not drop it).

Collision with enclosure despite unscrewing from the enclosure

Unscrew the screw plugs and screw them into the enclosure flap by 2...3 turns

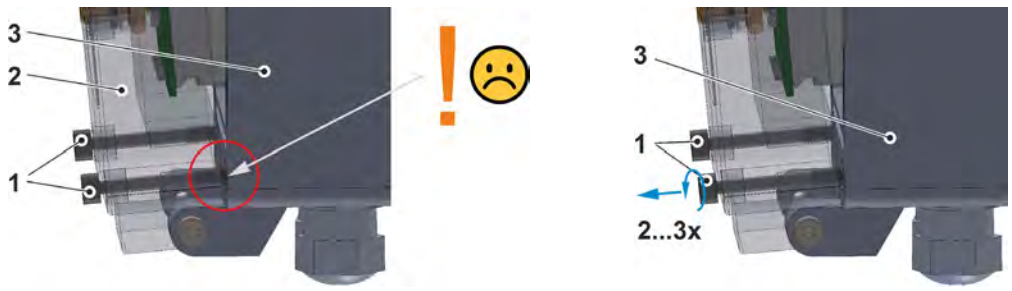

Fig. 23-2 Screw plugs: collision / unscrewing

Screw plugs captively secured by screwing them into the enclosure flap

Collision-free

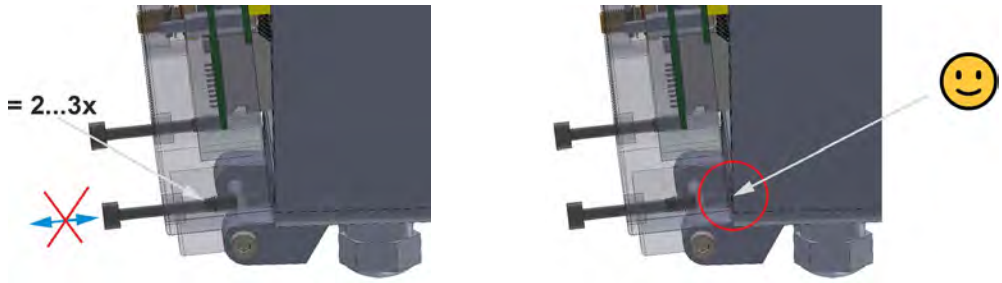

Fig. 23-3 Screw plugs: secured / collision avoided

➲ Procedure to **close** the enclosure (torque wrench required; work step 3):

1. Check the enclosure gaskets according to chapter "22.2 Gaskets" and clean if necessary.

2. Fold the enclosure flap (Fig. 23-2 Pos. 2) completely upwards and make sure that no sensor cable is pinched.
3. Screw the six screw plugs (Fig. 23-2 Pos. 1) (SW3) all the way into the housing and tighten to a torque of **1.3 Nm**.

23.2 Open / close enclosure S - Special Design

Fig. 23-4 Open / close enclosure S - Special Design

➲ Procedure to **open** the enclosure:

CAUTION

Equipment damage due to water

*Before you open the enclosure flap in the rain or in a location with potential water ingress from above, be sure to **protect** the NivuLink Micro II / NivuLink Micro II Ex in a suitable manner against the ingress of moisture.*

1. If the NivuLink Micro II is supplied with external voltage, disconnect it.
2. Release lock (Fig. 23-1 Pos. 1).
3. Carefully fold down the housing flap (Fig. 23-1 Pos. 2) to protect the hinge (do not drop it).

➲ Procedure to **close** the enclosure:

1. Check the enclosure gaskets according to chapter "22.2 Gaskets" and clean if necessary.
2. Fold up the enclosure flap (Fig. 23-1 Pos. 2). Make sure that no sensor cable is pinched.
3. Close the lock (Fig. 23-1 Pos. 1).
4. If necessary, switch on the external power supply again.

24 Fastening the Data Logger

The following variants are possible for fastening the NivuLink Micro II:

- Enclosure rear panel mounted on the mounting plate *ZMS0 176* (3 mm thick); mounting plate screwed to a flat surface (wall or similar) (drilling pattern see Fig. 24-1 Pos. 1)
- Directly screwed to a flat surface (wall or similar) with the rear panel of the enclosure (drilling pattern see Fig. 24-1 Pos. 2) (only for enclosure S – Special Design)
- Enclosure rear panel mounted on the mounting plate *ZMS0 176* (3 mm thick); mounting plate fixed to a mast (see Fig. 24-2) with clamps (openings see Fig. 24-2 Pos. 1)
- Enclosure rear panel mounted on the mounting plate *ZMS0 176* (3 mm thick) with bracket for hanging on the step iron in a shaft (see Fig. 24-3)

⇨ See also Chap. "49 Accessories".

Tools and fastening materials are not included in the delivery.

Fastening with Mounting Plate ZMS0 176

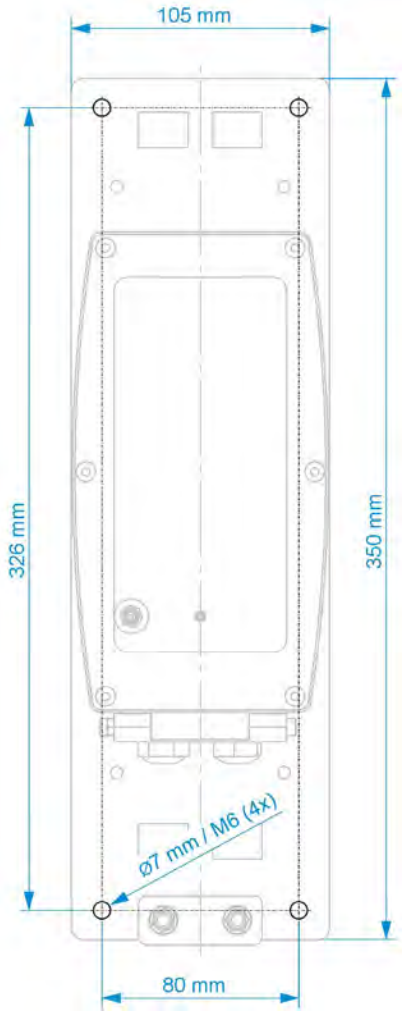

Fastening directly on a Wall (only for Enclosure S - Special Design)

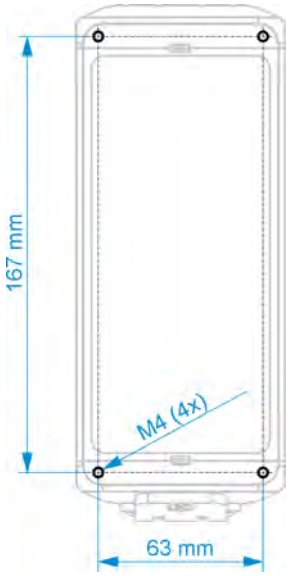

Fig. 24-1 Fastening drilling patterns

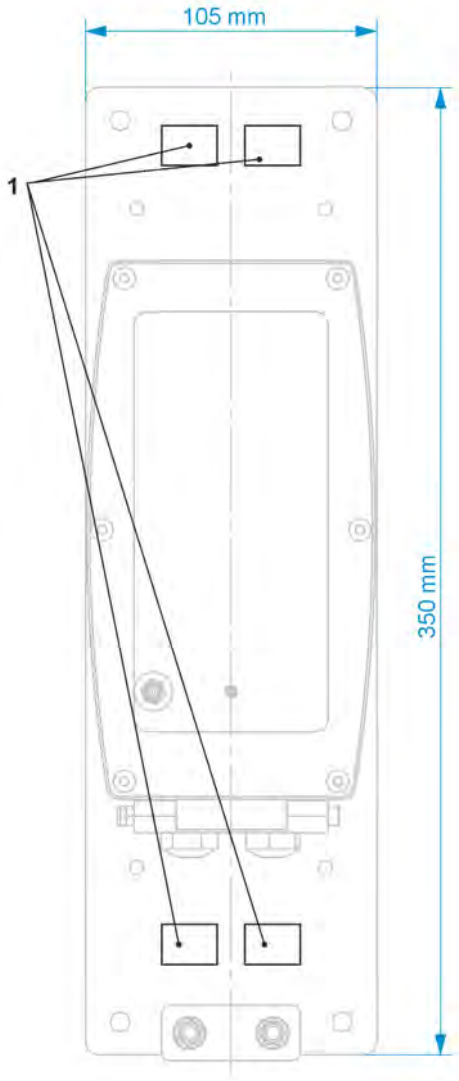

Fig. 24-2 Fastening on a mast using hose clamps

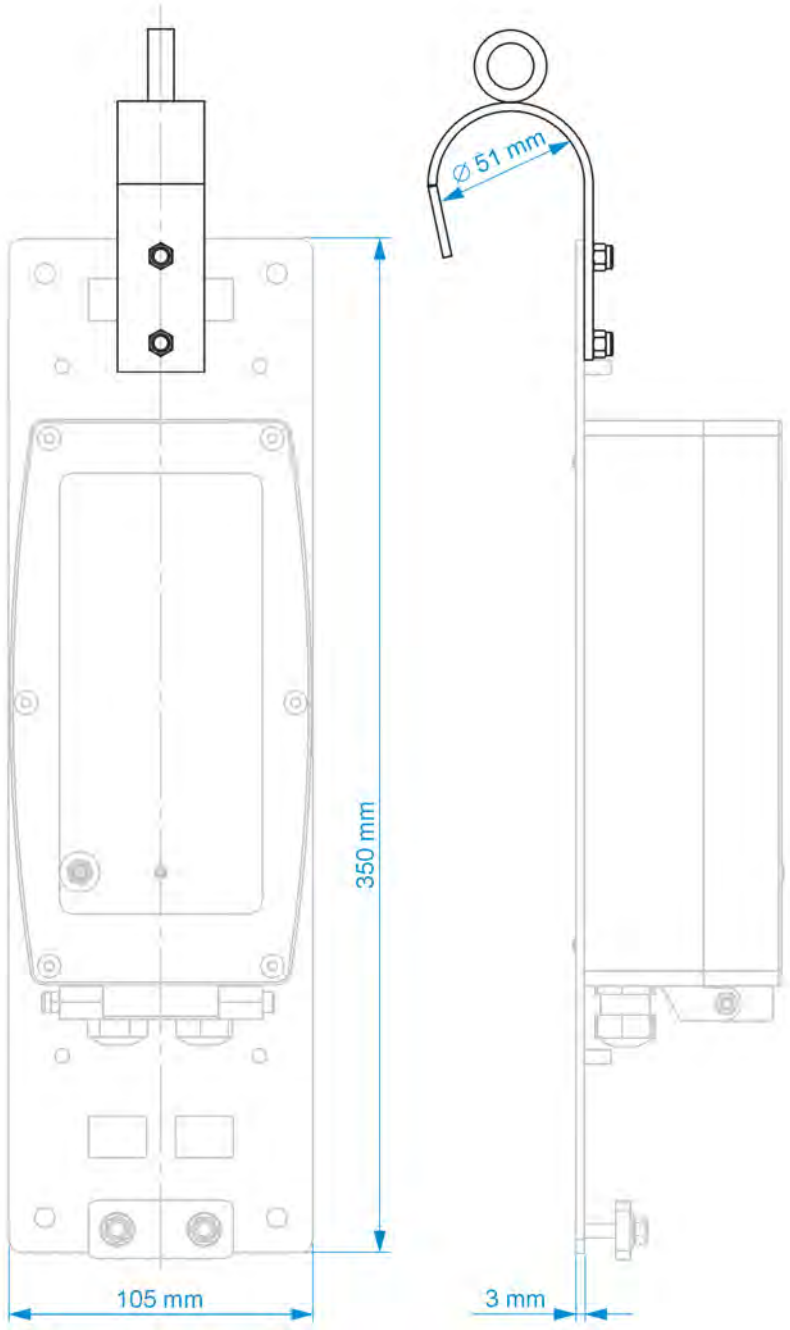

Fig. 24-3 Fastening with bracket on step iron

Allow sufficient space for antenna, cable connections and strain relief for the Ex sensor cables

Before final fixing, be sure to allow sufficient space/clearance for the mounting of the antenna (front of the device) and the cable connections (below at least 15 cm).

For Ex units, there must also be sufficient space for strain relief of the sensor cables (provided in mounting plate ZMS0 176).

➲ Procedure:

1. Outside the Ex area, insert the SIM card as described in Chapter "25 Prepare, insert / change SIM card".

2. Outside the Ex area, screw on the antenna as described in Chapter "26 Antenna Installation".
3. For wall mounting, transfer the respective drilling pattern (see Fig. 24-1) to the wall and drill the holes.
4. Open the enclosure according to chapter "23 Open / Close the Data Logger Enclosure" (enclosure flap downwards to the front).
5. Screw the enclosure to the wall or fasten the data logger to the mounting plate (if necessary, also the bracket; Fig. 24-3).

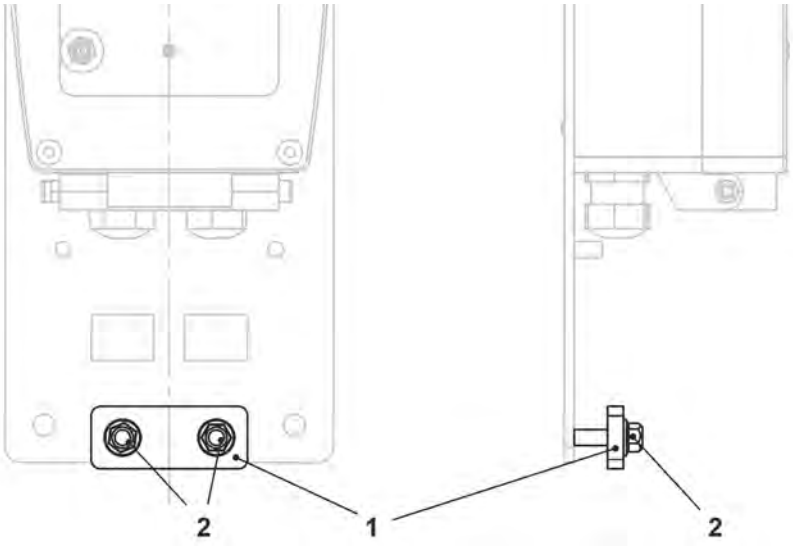

Fig. 24-4 Strain relief for sensor cables (for Ex units)

6. For Ex units, push the sensor cables through underneath the plate (Fig. 24-4 Pos. 1) of the strain relief. If necessary, the two nuts (Fig. 24-4 Pos. 2) must first be loosened slightly.
7. Connect sensors according to Chap. "28 Installation of Sensors" and "29 Connection of Sensors" through the cable glands.
8. If one of the cable glands was not needed, close it with a suitable sealing plug/locking bolt to ensure the protection class of the data logger.
   For **Ex units**, sealing is mandatory.
9. Close the enclosure according to Chap. "23 Open / Close the Data Logger Enclosure".
10. Pinch the sensor cable (without tensile load downwards) by tightening the nuts of the strain relief (Fig. 24-4).
    Info:
    With two different cable diameters, the plate can then also become somewhat slanted. It is important that both sensor cables are pinched without tensile load (downwards).
11. If necessary, fasten the mounting plate to the mast with hose clamps or hang it on the step iron in the shaft.

25 Prepare, insert / change SIM card

Optional use of a SIM card

The use of a SIM card is not absolutely necessary as the device has an integrated SIM chip. This enables data transmission to the NIVUS WebPortal.

See the current Price List or Parts List: NIVUS WebPortal Packages.

25.1 Activate PIN

Optionally, you can activate the PIN of the SIM card before inserting it into the data logger.

Preventing unauthorised use

Activate PIN to prevent unauthorised use of the SIM card in case of theft.

➲ Procedure:

1. Insert the SIM card into a mobile phone.
2. Activate PIN.
3. Remove the SIM card from the mobile phone.
   The PIN is activated and is required for parameterisation.

25.2 Insert / change SIM card in the data logger

25.2.1 Battery-Operated Data Logger

The SIM card must be inserted into the data logger outside the Ex area, as the batteries must be removed for this and this is not permitted in the Ex area.

➲ Procedure:

1. Open the NivuLink Micro II enclosure according to Chap. "23 Open / Close the Data Logger Enclosure".
2. Unthread the eyelet strap (Fig. 25-1 Pos. 1) and remove the battery (Fig. 25-1 Pos. 3) from the battery holder on the separating wall as described in chapter "48.1 Battery Replacement".
   The SIM card slot (Fig. 25-1 Pos. 2) is accessible.

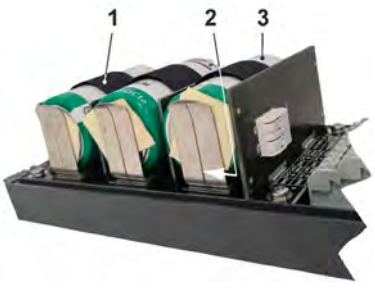

Fig. 25-1 SIM Card Slot (here: in enclosure S - special design)

3. If present, remove the previous SIM card.
4. Insert the SIM card into the card holder so that its contacts face the board.
5. Reinsert the battery as described in chapter "48.1 Battery Replacement" and secure it with the eyelet strap/Velcro strap.
6. Close the enclosure according to Chap. "23 Open / Close the Data Logger Enclosure".

25.2.2 Rechargeable Battery-Operated Data Logger

➲ Procedure:

1. Open the NivuLink Micro II enclosure according to Chap. "23 Open / Close the Data Logger Enclosure".
2. The SIM card slot (Fig. 25-2 Pos. 1) is accessible.

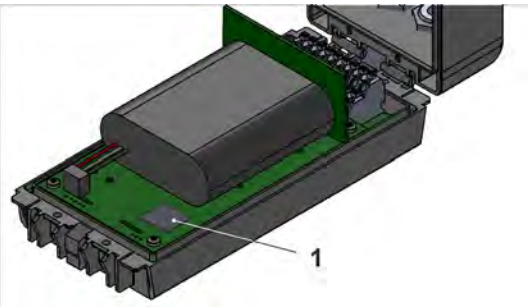

Fig. 25-2 SIM Card Slot (here: in enclosure S - special design)

3. If present, remove the previous SIM card.
4. Insert the SIM card into the card holder so that its contacts face the board.
5. Close the enclosure according to Chap. "23 Open / Close the Data Logger Enclosure".

26 Antenna Installation

Please note:

Only install antennas approved / recommended by NIVUS.

The mobile phone antenna must be positioned to ensure that no person is permanently (longer than 6 minutes) at a distance of less than 25 cm from the antenna.
When the device is operating normally, there is usually no health risk even at smaller distances, as the device only transmits for a short time on the mobile radio interface, but this distance should still be observed as a precautionary measure.

The antenna must not extend beyond the lightning-protected area of buildings and must be protected against lightning strikes.

WARNING

Do not install the antenna in a Ex area

*The antenna may only be installed/deinstalled **only outside** the Ex area.*
***Never within** Ex areas.*

The antenna is screwed onto the front of the NivuLink Micro II by hand.

27 Electrical Installation/Power Supply

27.1 General Information on the Power Supply

WARNING

Danger by electric voltage

Remove the batteries / rechargeable battery from the device.
If the data logger currently is connected to the mains, disconnect it.

When working on the electrical connections, there is a risk of electric shock. Observe the electrical data given on the nameplate.

Disregarding may lead to personal injury.

CAUTION

Equipment damage due to weather influences

*If water enters the enclosure, the data logger may be **damaged**.*

*If you open the enclosure flap in the rain or in a location with potential water ingress from above, be sure to **protect** the NivuLink Micro II in a suitable manner against the ingress of moisture.*

*Do **not** operate the data logger with the enclosure flap open.*

Observe Regulations

Observe the national installation instructions.

➲ Make sure that the following requirements are met:

1. Please note that installation may only be carried out by qualified personnel.
2. For the electrical installation, comply with the legal regulations of the respective country (such as VDE 0100 in Germany).
3. Follow further (country-specific) legal standards, regulations and technical codes.
4. Complete the installation of the data logger and the sensors before applying the operating voltage. Check whether the installation is correct.

⇨ You can find a description on how to connect the sensors starting on page 52.

CAUTION

Do not loosen screws

Do not loosen any screws inside the data logger!

Keep the enclosure flap closed during operation.

27.2 Removing/installing the batteries and the rechargeable battery

WARNING

Risk of explosion when removing/installing the batteries in Ex areas

*Batteries may only be removed/installed and charged **only outside** the Ex area.*
***Never within** Ex areas.*

When the batteries are removed, make sure that the poles are not short-circuited by an external object. This could cause very high short-circuit currents to flow, which could lead to excessive heat or fire and destruction of the batteries.

Observe the specifications on the batteries.

Installation of Spare Parts / Wearing Parts

The use of spare/wear parts (e.g. batteries or rechargeable batteries) that are not approved by NIVUS is generally not permitted.

Non-compliance may have negative consequences in terms of warranty and liability. See Chap. "6 Warranty" and "7 Disclaimer".

The following applies to the use of batteries:

- *All batteries used at the same time must be stamped with a uniform date by the manufacturer and must be new.*
- *The replacement of individual batteries is not permitted.*
- *Strict attention must be paid to the correct orientation of the batteries when inserting them.*
- *All batteries must bear the ® mark.*

⇨ Procedure for removal/installation see Chap. "48.1 Battery Replacement" starting on page 122 or "48.2 Rechargeable Battery Replacement" starting on page 123.

⇨ Batteries and rechargeable batteries are available from NIVUS at extra costs (see Chap. "49 Accessories").

27.3 Connecting an external Power Supply (only in non-Ex areas)

External power supply for Ex data logger

*With the Ex data logger, an external power supply is **only** possible if an **intrinsically safe power supply unit** is used and the **conditions** for the "Power Supply - **External (only Ex device)**" (page 33) listed in Chap. "19 Specifications" are met.*

In **non-Ex areas**, the data logger can also be supplied with external voltage. This is done, for example, via an external power supply unit or a solar panel.

Depending on whether the data logger is equipped with batteries or rechargeable batteries, different conditions apply.

	Data Logger with Batteries	Data Logger with rechargeable Battery
External Power Unit (possibly also solar power system)		
Batteries/rechargeable Batteries are charged	No, batteries cannot be recharged.	Yes
Connected external power supply unit supplies data logger	Only if the power supply voltage is greater than the available battery voltage. Otherwise, the batteries will take over. Principle of a UPS.	Yes, depending on the available rechargeable battery voltage.
Max. Input Voltage	< 15 V	< 24.5 V NIVUS Recommendation: max. 20 V
External Solar Panel		
Batteries/rechargeable Batteries are charged	-	Yes
Connected external solar panel supplies data logger	-	Yes, depending on the available rechargeable battery voltage.
Nominal voltage solar panel	-	12 V
Open-circuit voltage	-	< 24.5 V

Tab. 4 Conditions for connecting external voltage sources

➲ Procedure:

1. Open the enclosure according to Chap. "23 Open / Close the Data Logger Enclosure".
2. Insert the cable of the external power source into the enclosure through the cable glands on the underside of the NivuLink Micro II.
3. Connect the wires to the 12 V voltage terminals (Fig. 27-1 Pos. 1).

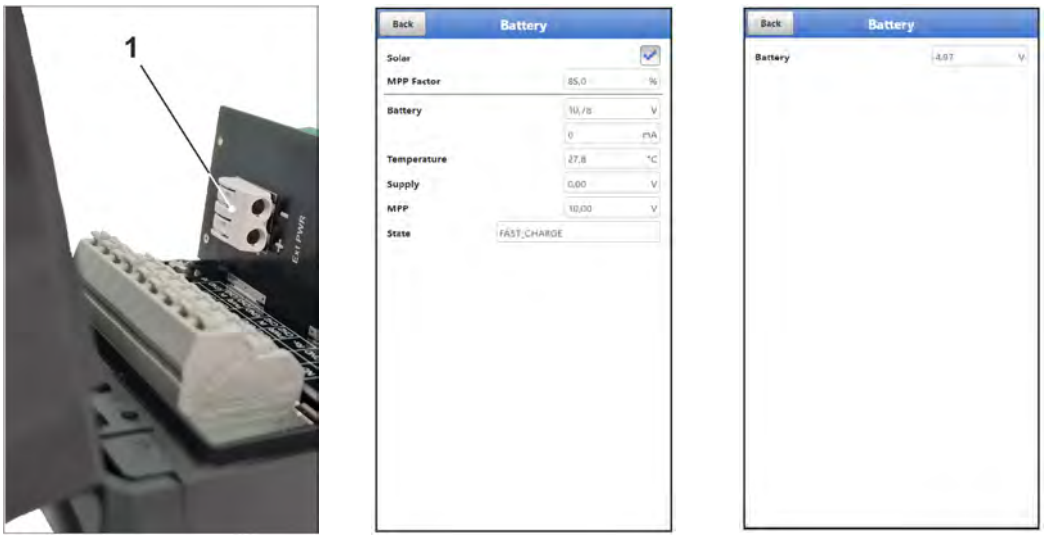

Fig. 27-1 Voltage terminals 12 V / menu battery rechargeable battery version/battery version

4. Close the enclosure according to Chap. "23 Open / Close the Data Logger Enclosure".

5. When parameterising the data logger with **rechargeable battery** in the >Battery< menu, make sure that
   - for **solar panels** without their own charge controller the **check mark** for "Solar" is **set**.
   - the **check mark** for "Solar" is **not set** for **external power units** with their own charge controller.
   No setting is possible when parameterising the data logger with **batteries**.
   Background info:
   In the >Battery< menu, the highest voltage present is displayed, regardless of whether the supply is currently via the batteries or the external power supply unit.

28 Installation of Sensors

This chapter describes the sensors that can be used and their usual locations. The exact description for mounting the sensors is included in the relevant (mounting) instructions.

Observe Occupational Safety Regulations

During assembly work, ensure that all work safety regulations are observed.

28.1 Sensor Installation Principles

The placement of the sensors on the system is decisive for the reliability of the measurement results. Therefore, care must be taken to ensure good hydraulic conditions and a sufficient calming section at the installation location. The sensor types and their mounting must be determined individually, depending on the measuring point.

The conditions for selecting a calming section and mounting the sensors are described in the respective (mounting) instructions.

The measurement place or the inputs must be parameterised **before installation**. The corresponding preparation of the measurement place and its dimensions/key data can be taken from the documents of the respective facility or can be requested from the facility operator.

WARNING

Danger of explosion when opening the unit and plugging in the USB cable

*The device may only be opened **only outside** the Ex area.*
***Never within** Ex areas.*

This also means that the USB cable for parameterising the NivuLink Micro II cannot be plugged in and the parameterisation cannot be carried out.

29 Connection of Sensors / the Rain Gauge

29.1 Terminal Wiring

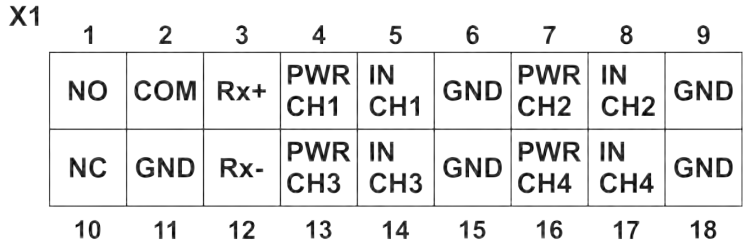

Fig. 29-1 Terminal wiring X1 on NivuLink Micro II / NivuLink Micro II Ex

Name	Connection pin	Connection Values (I0, P0 and characteristic curve only in connection with Ex devices)
Relay - Output	X1.1 (Rel-NO), X1.2 (Rel-COM), X1.10 (Rel-NC)	U_i = 26 V ; I_i = 100 mA ; P_i = 2.6 W C_i = 0; L_i = 0
RS485 Interface	X1.3 (RxTx+), X1.11 (GND), X1.12 (RxTx-)	U_o = 5.88 V ; I_o = 150.1 mA ; P_o = 221.9 mW Characteristic : linear U_i = 7.21 V ; I_i = 176 mA ; P_i = 317.24 mW C_i = 0 ; L_i = 0
Universal input 1	X1.4 (CH1_PWR) X1.5 (CH1_IN) X1.6 (GND)	U_o = 25.09 V ; I_o = 90.9 mA ; P_o = 570 mW Characteristic: linear
Universal input 2	X1.7 (CH2_PWR) X1.8 (CH2_IN) X1.9 (GND)	U_o = 25.09 V ; I_o = 90.9 mA ; P_o = 570 mW Characteristic: linear
Universal input 3	X1.13 (CH3_PWR) X1.14 (CH3_IN) X1.15 (GND)	U_o = 25.09 V ; I_o = 90.9 mA ; P_o = 570 mW Characteristic: linear
Universal input 4	X1.16 (CH4_PWR) X1.17 (CH4_IN) X1.18 (GND)	U_o = 25.09 V ; I_o = 90.9 mA ; P_o = 570 mW Characteristic: linear

Tab. 5 Connection values of clamps on NivuLink Micro II / NivuLink Micro II Ex

29.2 Cable for Sensor Connection

The sensors are supplied with permanently connected cables. On the data logger side with open cable ends. Depending on the sensor, these are connected directly to the terminal block of the data logger.
The sensors can be ordered with cables of different lengths.

29.3 Connecting Sensors

List of connectable sensors see Chapter "17.8 Connectable Sensors/Probes".

The sensors are connected to terminal block X1 inside the data logger. To do this, insert the cables into the enclosure through the cable glands on the underside of the NivuLink Micro II / NivuLink Micro II Ex.

Required Parts/Tools

- Cable glands (included in the NivuLink Micro II accessory pack)
- Wire end ferrules
- Hexagon socket torque spanner SW3 (for tightening the screw plugs) (torque 1.3 Nm for enclosure K - Plastic)
- Open end spanner/torque spanner SW22 (for loosening/tightening the union nut) (torque 4 Nm for enclosure K - Plastic)
- Crimping pliers (for attaching the wire end ferrules)

➲ **Procedure** for all connectable sensors/devices:

1. Cable gland on NivuLink Micro II:
   Loosen the union nut and remove the sealing plug/locking bolt.
2. Insert cable glands according to the cable diameters to be inserted (partially included in the NivuLink Micro II accessory pack).
3. Open the enclosure flap as described in section "23 Open / Close the Data Logger Enclosure", but **be sure** to distinguish between **Enclosures K and S**.
4. Insert the cable through the cable gland.
5. Prepare cable wires:
   Cut each wire to a **length of 180 mm** (remove cable sheath accordingly) and strip **approx. 6 mm** of insulation.
   Attach wire end ferrules and fasten with crimping pliers.

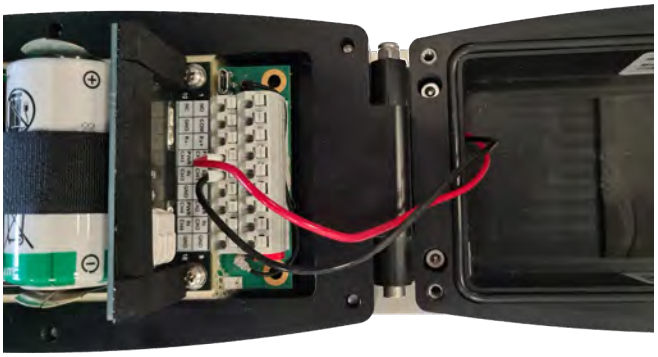

6. Connect the wires according to the terminal assignment diagram (see Fig. 29-1) or the following connection examples:
   2-wire sensor: Fig. 29-2,
   3-wire sensor: Fig. 29-3,
   Active/passive signal transmitter: Fig. 29-4,
   Rain Gauge: Chap. "29.4 Connecting the Rain Gauge" and Fig. 29-5.

7. To close the enclosure flap, **carefully** pull the sensor cable from outside the enclosure until the **wires** just remain **completely** inside the enclosure. No wires must be visible outside the cable gland, otherwise protection class IP68 cannot be achieved.

8. Tighten the union nut of the cable gland on enclosure K with a torque of **4 Nm**.
9. Close the enclosure flap as described in section "23 Open / Close the Data Logger Enclosure", but **be sure** to distinguish between **Enclosures K and S**.
   Info: For the enclosure K, observe the torque of 1.3 Nm.

➲ In the case of **Ex units**, it must also be ensured that the sensor cables are secured underneath the enclosure with the **strain relief** supplied by NIVUS. See also Chap. "24 Fastening the Data Logger".

Wiring Examples:

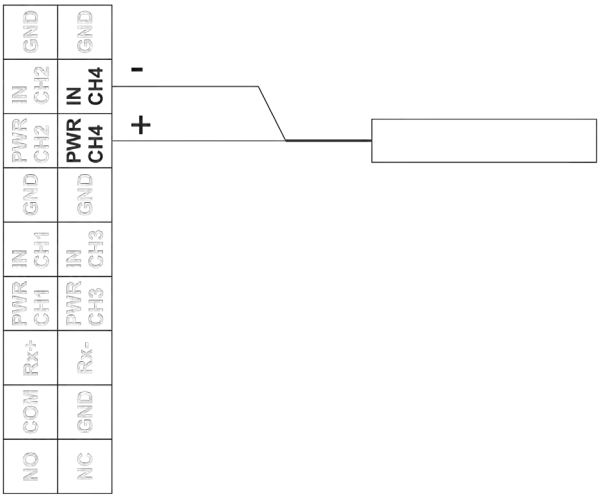

Fig. 29-2 Connecting a 2-wire sensor

HART Functionality available

The CH3 connection (for input 3) also has HART functionality for i-Series sensors by NIVUS.

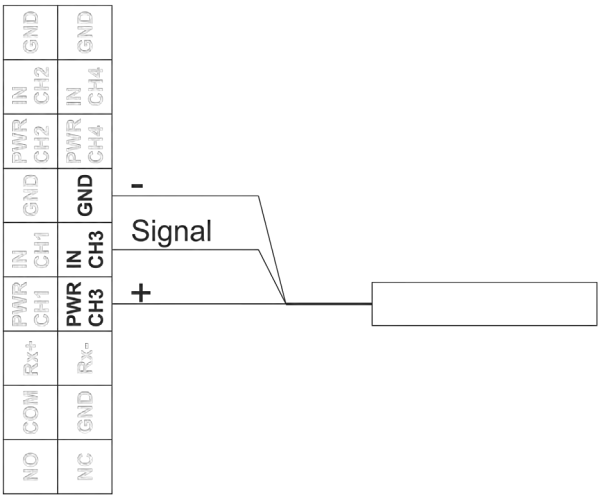

Fig. 29-3 Connecting a 3-wire sensor

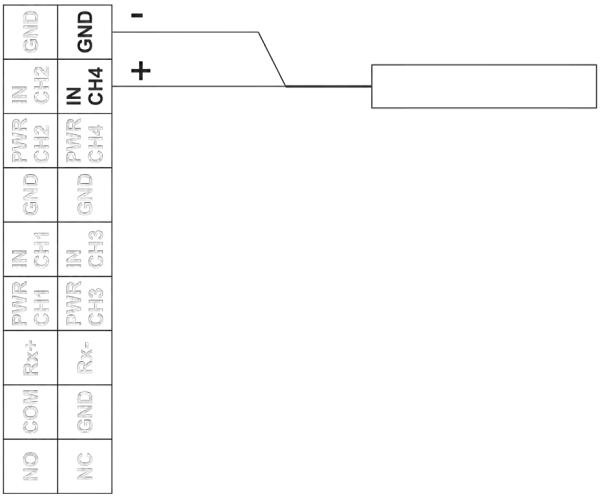

Fig. 29-4 Connecting an active or passive signal transmitter

29.4 Connecting the Rain Gauge

Connection of a rain gauge WITH heating exclusively to rechargeable battery-powered data logger NLG02 xGRxxxx

If the rain gauge heating and the data logger NivuLink Micro II are powered simultaneously, exclusively use the data logger NLG02 xGRxxxx.
This,

- *like the heater, can be supplied with 24 V DC and*
- *is equipped with a charging function for the internal battery.*

To connect the NivuLink Micro II to a rain gauge RMT0, use the cable *ZUB0 KAB RM NLG* (one side with plug, other side with open cable ends).

The Rain Gauge is connected to terminal block X1 inside the data logger. To do this, insert the cable into the enclosure through the cable glands on the underside of the NivuLink Micro II.

➲ Procedure:

1. Plug the enclosed jumper (short circuit bridge) (Fig. 29-5 Pos. 1) onto the two empty pins next to the terminal strip.
2. Prepare the cable as described in section "29.3 Connecting Sensors" and follow the procedure with the blue cable tie.
3. Connect the brown and white wires to the terminal strip according to Fig. 29-5.
   The two remaining lines (green/gn and yellow/ye) are only used if the rain gauge has a heater and this is to be connected. The two cables are then connected to the 12 V voltage terminal for the external power supply:
   yellow (ye) for (+) or green (gn) for (-)

⇨ See also Chap. "27.3 Connecting an external Power Supply".

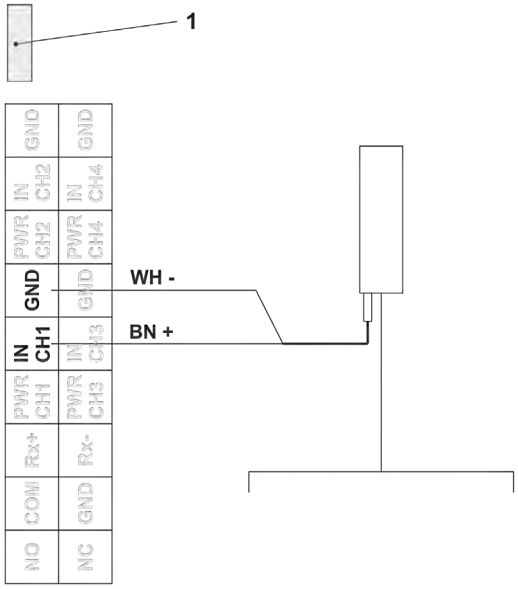

Fig. 29-5 Connecting a Rain Gauge

4. Insert the plug of the cable on the Rain Gauge and screw it tight.

⇨ For parameterisation for using the rain gauge, see Chap. "39.2 Menu Inputs": **Impulse Counter**.

Commissioning

30 Notes to the User

Before connecting and operating the NivuLink Micro II / NivuLink Micro II Ex the instructions below shall be followed.

This instruction manual contains all information required for parameterisation and use of the data logger. The instruction manual is intended for qualified expert personnel. The instruction manual is intended for qualified expert personnel. Appropriate knowledge in the areas of measurement systems, automation technology, control engineering, information technology and wastewater hydraulics are preconditions for putting the NivuLink Micro II / NivuLink Micro II Ex into operation.

Read this instruction manual carefully to ensure proper functioning of the NivuLink Micro II / NivuLink Micro II Ex. Connect the NivuLink Micro II / NivuLink Micro II Ex according to Chapter "29.3 Connecting Sensors".

If you have any questions regarding installation, connection or parameter setting, please contact our hotline at:

- +49 7262 9191-955

General Principles

Commissioning of the measurement system shall not be carried out before installation has been finished and verified.

The measurement place or the inputs must be parameterised **before the installation** of the data logger.

WARNING

Danger of explosion when opening the unit and plugging in the USB cable

*The device may only be opened **only outside** the Ex area.*
***Never within** Ex areas.*

This also means that the USB cable for parameterising the NivuLink Micro II cannot be plugged in and the parameterisation must be carried out before the installation of the data logger.

Observe the information in this instruction manual to prevent incorrect or faulty or parameterisation. Familiarise yourself with the operation of the data logger before you start with the parameterisation.

To set the parameters of the measurement place, in most cases it is sufficient to enter:

- Definition of inputs (type)
- Definition of units
- Operation mode settings

The user interface of the NivuLink Micro II / NivuLink Micro II Ex is easy to understand. You can quickly make the basic settings yourself.

31 Lighting System of the Status LED on NivuLink Micro II / NivuLink Micro II Ex

The status LED (Fig. 31-1) on the front of the NivuLink Micro II / NivuLink Micro II Ex lights up during operation according to a predefined system that allows conclusions to be drawn about the current status of the device.

Fig. 31-1 LED on the front of the NivuLink Micro II / NivuLink Micro II Ex (Enclosure S / K)

A distinction is made here primarily according to the operating condition. When the data logger is "awake", it acts differently than in shutdown mode.

- **Awake:**

The sequence consists of a total of twelve light segments.

First there is a long (1.5 s) coloured light of the LED indicating the status of the modem, then a short (0.5 s) pause followed by a short (0.5 s) coloured light for each of the four inputs and for the entire system (i.e. a total of five short pauses/lighting phases). After a long pause (1.5 s), the sequence starts again.

***Explanation** of the following table of possible light combinations:*

- *LED oval means 1.5 s active (on or off)*
- *LED round means 0.5 s active (on or off)*
- *Green stands for "Correct" (everything is in order)*
- *Red stands for "Error" (the affected element does not work as it should)*
- *Magenta/pink, blue or yellow/yellow stands for a special message*
- *Grey is a placeholder for one of the other colours and must be considered individually in the overall sequence, as not all possible variants are shown in the table below.*

Modem	Input 1	Input 2	Input 3	Input 4	System
ok	ok	ok	ok	ok	ok
Err.	Err.	Err.	Err.	Err.	Err.
Going online	ok / Err.	ok / Err.	ok / Err.	ok / Err.	ok / Err.
Online	ok / Err.	ok / Err.	ok / Err.	ok / Err.	ok / Err.
Test transmission triggered [1]					

[1] *Hold the magnet against the reed contact for approx. 10 s to trigger a test transmission; note that the online mode is started after approx. 15 s; if this is not desired, remove the magnet in good time before the 15 s have elapsed*

Tab. 6 Lighting system of the status LED in the awake condition

- **Shutdown mode:**

This sequence consists of a total of four light segments.

First there is a short (0.5 s) coloured light of the LED indicating the status of the system/modem, then a short (0.5 s) pause each time followed by a short (0.5 s) coloured light for the status of the events. After a short pause (0.5 s), the sequence starts again.

Explanation *of the following table of possible light combinations:*

- *LED round means 0.5 s active (on or off)*
- *Green stands for "Correct" (everything is in order)*
- *Red stands for "Error" (the affected element does not work as it should)*
- *Magenta/pink, blue or yellow/yellow each stand for a special message*
- *Grey is a placeholder for one of the other colours and must be considered individually in the overall sequence, as not all possible variants are shown in the table below.*

System / Modem		Event	
ok		No event	
Err.		Event	
Going online		Event / no event	
Online		Event / no event	

Tab. 7 Lighting system of the status LED in shutdown mode

32 Connection Setup

32.1 General

The entire operation of the NivuLink Micro II / NivuLink Micro II Ex is carried out via notebook or PC (using the NIVUS WebPortal if necessary).

The procedure for establishing a connection for the Windows operating systems is described below.

32.2 Windows Operating System

➲ Procedure:

1. Start the notebook or PC.
2. Ensure power supply at the NivuLink Micro II / NivuLink Micro II Ex.
3. Open the NivuLink Micro II / NivuLink Micro II Ex enclosure according to Chap. "23 Open / Close the Data Logger Enclosure".
4. Plug the USB cable into the NLG02 and the notebook/PC.
5. "Wake up" the NLG02: To do this, hold the supplied magnet in front of the reed contact (Fig. 32-1 Pos. 1; at the front of the NLG02) until the LED (Fig. 32-1 Pos. 2) lights up.

Fig. 32-1 Waking up the NivuLink Micro II / NivuLink Micro II Ex (here: Enclosure S - Special Design)

6. Start Internet browser.

Fig. 32-2 Address field

7. Enter the IP address "192.168.11.11" in the address field (Fig. 32-2) and open.
8. Enter access details (user name/password) (see sticker enclosed ex works)
   After successful connection the display of the NivuLink Micro II / NivuLink Micro II Ex (Fig. 32-3) is shown.

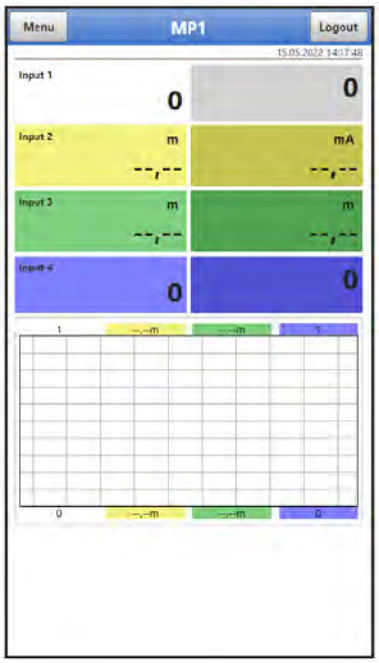

Fig. 32-3 Indication of NLG02 display in the browser

9. To set up a favourite in the browser (for direct access), tap the star for "Favourites" (Fig. 32-4 Pos. 1) (Google Chrome is used as an example) and confirm with "Done" (Fig. 32-4 Pos. 2).

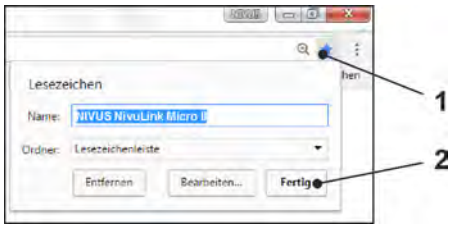

Fig. 32-4 Setting up favourite

The bookmark appears on the bookmark bar (Fig. 32-5 Pos. 1) and can be used for immediate access by simply selecting it without entering the IP address.

This link can also be used with any other NivuLink Micro II / NivuLink Micro II Ex unit after the respective selection in the WLAN list.

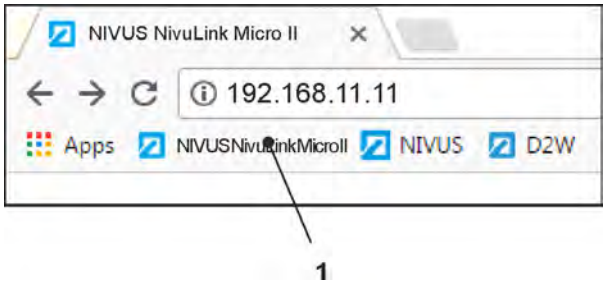

Fig. 32-5 Link in the bookmarks bar

33 Menu Control/Overview

33.1 Overview Display

Via the NIVUS display you can see at any time where you are in the menu and which entries you are currently editing.

See also Chap. "Main Screen" starting on page 65.

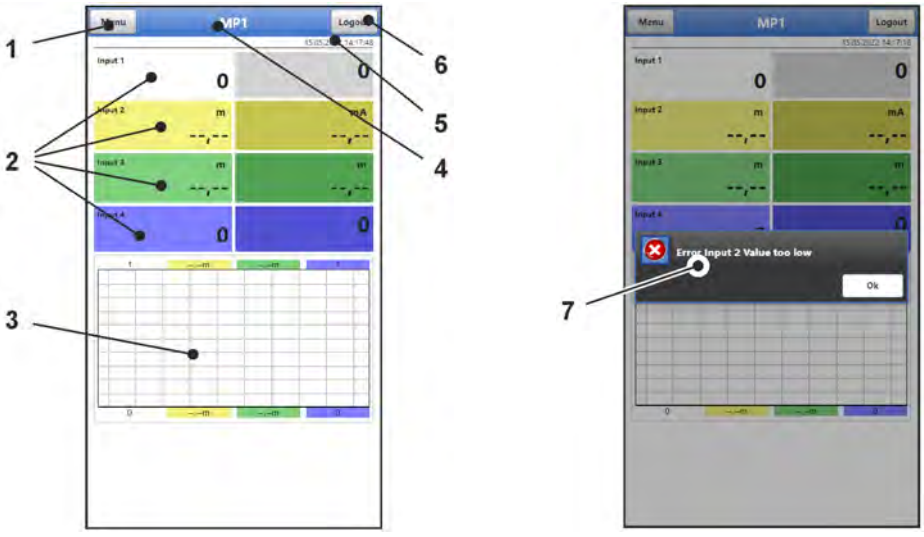

1 Menu / Back (depending on the display view)

2 Display area (output field 4...8 for input 1...4)

3 Display area 3 (trend hydrograph of input 1...4)

4 Measurement Place Name

5 Date and Time

6 Logout (disconnecting the notebook/PC from the data logger; the data logger continues to run with the last saved settings)

7 Possible error message, information or display for active service mode (one-time display, directly after opening as a separate window in the centre of the display; close with "Ok")

Fig. 33-1 Display view

33.2 Save Parameters

After changing parameters and scrolling back via the menu field, the changed parameters must be saved before the changes take effect. After saving, the status message "Successful" appears (Fig. 33-2).

Fig. 33-2 Save parameters

➲ Procedure for saving see Chapter "37.1 Save Parameters".

33.3 Menus

All menus are described in a logical programming sequence in chapter "Setting Parameters" starting on page 68.

There are up to six basic menus available in the main menu. These become visible and selectable by selecting the "Menu" field (from the main display) or the "Back" field (from within the submenus).

In detail these are:

Application	Guides commissioning personnel through the complete parameterisation of inputs, digital output and diagnostics
Data	- Graphical representation of the measurement values history - Saving of data - Saving and loading of parameters
System	- Retrieval of basic information (serial number, version, item number, etc.) on the data logger (required for queries with NIVUS GmbH) - Setting the language and date format under >Country Settings< - Setting the system time, time zones and time server under >Time/Date< - Indicating and deleting error messages under >Error Messages< - Service Levels - Restarting the data logger - Shut Down Device (Powerdown) - Parameter Reset - Feature Unlock - Setting the operation mode - etc.
Communication	Setting parameters for the communication interfaces of the NivuLink Micro II / NivuLink Micro II Ex
Battery	- Battery usage: Display of the voltage present - Rechargeable battery usage: Information on voltage, any solar panel connected, battery temperature, etc.
Alarm	Activate the alarm for errors and set the upper and lower limits/thresholds at which an alarm is sent by e-mail via the NIVUS WebPortal (menu not available for NivuLink Micro II with communication over LoRaWAN)

Tab. 8 Menu overview

Main Screen

34 Functions of the Main Screen

Quick Access

In addition to displaying the values themselves, the main screen also allows for direct access to the most important setting parameters.

The quick access enables to directly jump to important individual menus without having to go through the (sub)menus of the parameterisation. It is thus used for a quick and uncomplicated check of the inputs/outputs.

Via the quick access, a quick diagnosis, an uncomplicated parameter adjustment as well as changes in the settings are possible. Direct queries for basic device data such as serial and article number as well as the firmware version of the data logger are also possible in just a few steps.

35 General Overview

The following information is provided in the **top area** of the display:

- Menu and Logout Icons
- Measurement Place Name
- Date and Time

In operation mode the NivuLink Micro II displays the following important measured values in the **main area**:

- Inputs 1…4

A diagram for the calculated values of inputs 1...4 is shown in the **lower area** of the display (see also Chap. "36.1 Display fields input 1**...**4").

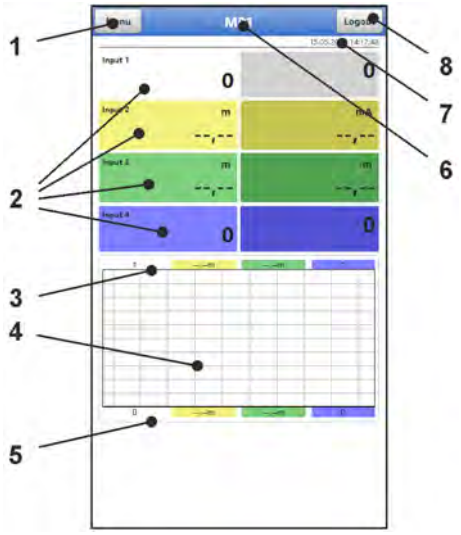

1 Button to open the main menu

2 Output fields for the values of inputs 1…4

3 Upper scaling range for the diagram

4 Diagram for the display of inputs 1…4

5 Lower scaling range for the diagram

6 Measurement Place Name

7 Date and Time

8 Button to log out the notebook/PC

Fig. 35-1 Main screen overview (example without measurement values)

A pop-up menu with the most important settings and information can be accessed directly via the fields of the main display with a mouse click (left button). A further mouse click on the selection opens the respective pages and offers the possibility to parameterise or view current states.

Fig. 35-2 Pop-up menus

Save Parameters

After changing system-specific parameters, the changes must be saved for them to take effect.

36 Display Fields

36.1 Display fields input 1…4

Two current values are displayed next to each other for all four inputs (depending on the assignment of the inputs). The right field shows the **measured raw value**, the left field the **value calculated** from it.

When clicking on the pop-up menus, the data logger opens the following pages (identical on the right and left):

- Settings: >Application< / >Inputs< (always exactly suitable for the corresponding input); see Chapter "39.2 Menu Inputs"
- Diagnostics: >Application< / >Diagnostics< / >Inputs<; see Chapter "39.4 Menu Diagnostics"
- Error Messages: >System< / >Error Messages< / >Active Error Messages<; see Chapter "41.4 Menu Error Messages"

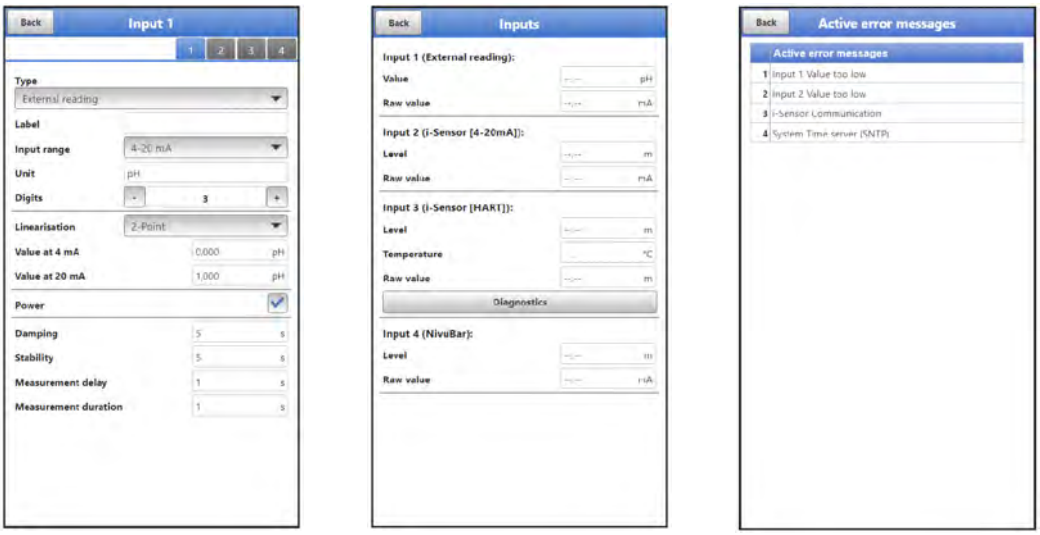

Fig. 36-1 Opened display fields with input 1 – 4 (using input 1 as example)

Setting Parameters

37 General Programming

Setting parameters using the Micro-USB interface

Both parameterisation and diagnostics can be carried out directly on site (in the safe area) with the USB connection cable and USB isolator connected between the data logger and the SELV/PLEV-supplied notebook/PC.

To do this, open the enclosure as described in chapter "23 Open / Close the Data Logger Enclosure" and plug the USB cable into the Micro-USB interface (Fig. 3-3 Pos. 5).

In principle, changed parameters do not become effective before they have been saved.

When exiting all menus via the "Back" field, the data logger checks whether parameters have been changed. Finally, you are asked whether the parameters should be saved.

- >Yes<: the changed parameter setting is accepted and saved.
- >No<: the changes to the parameters are discarded and the device exits the menus.
- >Cancel<: You exit the query. The parameters remain changed but are not yet effective and not saved.

Tip for repeated measurement of the same measurement places

If measuring points are not only measured once but repeatedly, it is recommended to save the parameterisation of the measuring point and, if necessary, also the measurement data on the notebook/PC. During the next measurement at the measuring point in question, these can then be quickly transmitted onto the data logger and there is no need for renewed parameterisation.
See Chapter "40.2 Menu Data Memory" starting on page 84.

37.1 Save Parameters

After entering all necessary (measurement place) parameters, these must be saved to become effective.

➲ Procedure:

1. Select "Back" repeatedly until a window opens with the message >Save Parameters?<. Confirm with >Yes< *2.
   The message "Successful!" indicates the completed saving of the parameters.

   *2) >Yes< saves the new parameters; >No< cancels the saving process and the last saved parameters are active again; >Cancel< cancels the saving process, the last changed parameters remain active and the initialisation process can be continued.

37.2 Change Access Data (User Name/Password)

The **user name** is set to "admin" **per default**.

The **password** is set **per default** to an individually determined identifier for the device. This password is enclosed with the data logger as a sticker (inside the enclosure) and can be affixed by the user at a location to be determined by him/herself (inside the unit or elsewhere).

These factory-assigned access data can be changed as described below. The new access data must have a length between 1 and 30 characters.

➲ Procedure:

1. Open the main menu via "Menu".
2. Open the >Communication< menu.
3. Open the >HTTP< menu.
4. Select the field >User Name< or >Password<.
5. Enter the new name or new password and confirm.

Only one user at a time can access the data logger and its parameterisation when using the Micro-USB cable. In parallel, other users can theoretically use the data logger via remote access (not recommended), which is why it is essential to ensure that this is done in consultation when making changes to the parameterisation and that there is no simultaneous access. The last saved parameter is always valid.

Keep your access data safe

Only give the access details to authorised persons.

If you write down the access details, keep them in a safe place.

37.3 Loss of Access Data

The procedure for resetting the access data is described below.

The access data is reset to the factory setting for the duration of the process (steps 5 to 8).

The factory-assigned access data can be found on the sticker inside the enclosure. If this sticker cannot be found later, the factory-assigned password can be requested from NIVUS by stating the device serial number.

➲ Procedure:

1. Open the enclosure flap according to Chap. "23 Open / Close the Data Logger Enclosure".
2. Remove the batteries outside the Ex area according to Chap. "48.1 Battery Replacement".
3. If a Micro-USB cable is plugged in, unplug it.
4. Hold the supplied magnet to the Reed contact.
5. Plug in the micro USB cable to subsequently change the access data.
6. As soon as the LED flashes in the normal rhythm (i.e. as soon as the boot process is completed), the factory-supplied access data will work again.
7. Enter the new access data according to Chapter "37.2 Change Access Data (User Name/Password)".
8. If no further parameterisation/diagnostics are to be carried out, disconnect the Micro-USB cable again.
9. Reinsert the batteries.
10. Close the enclosure flap.

Data Logger with rechargeable Battery

For data loggers with rechargeable batteries, this procedure is carried out in the same way, taking into account Chapter "48.2 Rechargeable Battery Replacement".

38 Parameter Functions

38.1 Main Menu

The NivuLink Micro II / NivuLink Micro II Ex is parameterised via the total of up to six settings menus.

The individual menus are explained in greater detail starting with Chapter "39 Parameter Menu Application". In the main menu there are five or six icons with the functions described below:

Fig. 38-1 Overview Main Menu (Data Transmission / LoRaWAN)

38.2 Functions of the first Menu Level

38.2.1 Menu - Application

Fig. 38-2 Menu Application

The application menu includes four submenus.

The measuring point name is entered here and the inputs as well as the digital output are defined:

- Input/Output Types
- Input Ranges
- Units

- and various others

Within this menu there is also the possibility of diagnosing the inputs and the digital output.
Possible entries or changes within this menu:

- Damping of signal evaluation/output
- Stability of signal evaluation/output
- Measurement delay and measurement duration

38.2.2 Menu – Data

Fig. 38-3 Menu Data

The data menu includes all internally saved measurement values.
The following functions are available:

- Graphic representation of the measurement values
- Transfer of archived measurement data to notebook/PC
- Transfer of set parameters from and to notebook/PC
- Setting and deleting options of the internal data memory

38.2.3 Menu – System

Fig. 38-4 Menu System

This menu contains information on the data logger:

- Serial number
- Article No
- Firmware version
- Information about Open Source Software used in the device firmware (Credits/Licences)

In addition, the following settings are possible:

- Language
- Units
- Correct date and time
- Show active error messages
- Delete error memory
- Start device again (Restart) oder shut down (Powerdown)
- Execute parameter reset
- Unlock licenced functions
- Carry out firmware updates
- Configure operation mode and storage cycle
- Determine measurement duration

38.2.4 Menu - Communication

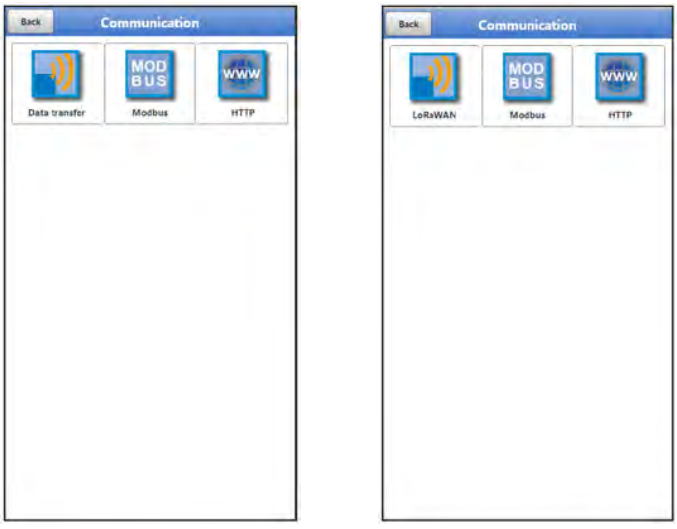

Fig. 38-5 Menu Communication

This menu contains the setting options for communication with other systems as well as for adjustment of access data (user name/password):

- Data transmission or LoRaWAN (depending on device version)
- Modbus
- HTTP

38.2.5 Menu - Battery

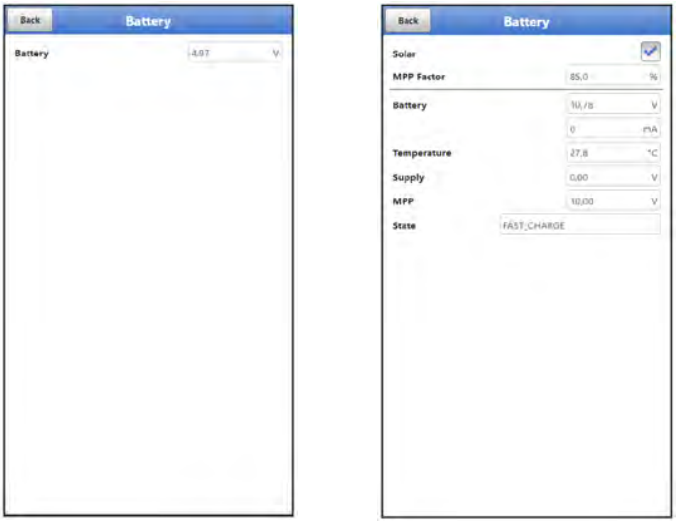

Fig. 38-6 Menu Battery

In the Battery menu, depending on the unit version, the current battery voltage is displayed or information and current values for the battery and the voltage source used (solar cell/panel or mains adapter).

Storage tips for the batteries/rechargeable batteries

By basically storing and using the batteries/rechargeable batteries at non-critical temperatures (such as room temperature) and storing them dust-free, clean and dry, their capacity can be maintained for longer.
This means that even remote data transmission can often still work well at values in the lower capacity range.

38.2.6 Menu – Alarm (only in connection with menu Data Transmission)

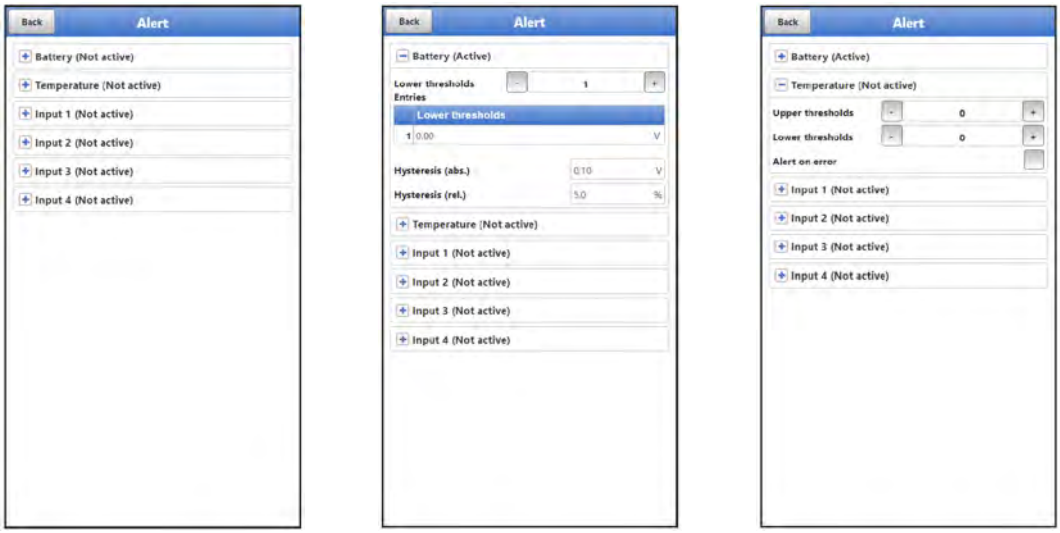

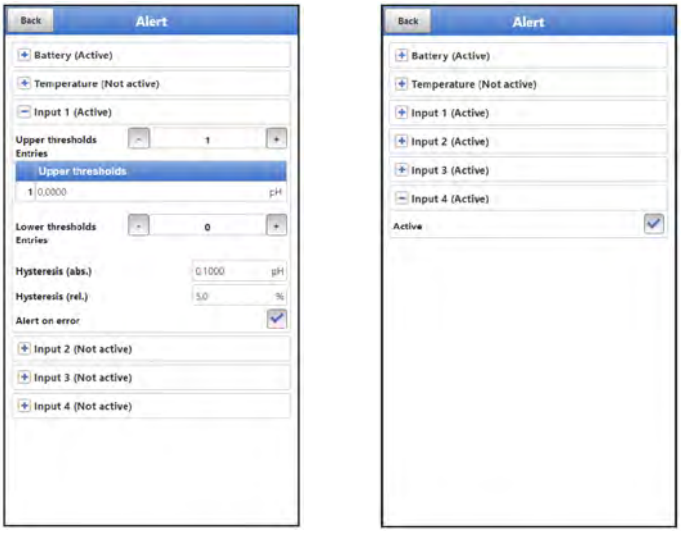

Fig. 38-7 Menu Alarm

The Alarm menu consists of up to six sub-items, depending on the parameterisation of the data logger: >Battery<, >Temperature<, >Input 1<, >Input 2<, >Input 3< and >Input 4<.

The upper and lower limit values/thresholds and error messages can be set here. When these are reached/occur, the data logger alerts the NIVUS WebPortal. The NIVUS WebPortal then sends an alarm email to preset email addresses.

39 Parameter Menu Application

Fig. 39-1 Menu Application

The general parameterisation is described below.

39.1 Menu Measurement Place

The name of the measurement place to be parameterised is entered under Measurement Place.

➲ Open menu >Measurement Place< via "Menu" and >Application<.

When initialising the measurement place name, the default name is automatically deleted after the first letter or number is selected.

➲ Write the desired measurement place name in the text field and confirm with "Enter". The measurement place name is transferred to the main menu and displayed there.

39.2 Menu Inputs

In this menu, the functions of the inputs are defined.

➲ Open menu >Inputs< via "Menu" and >Application<.

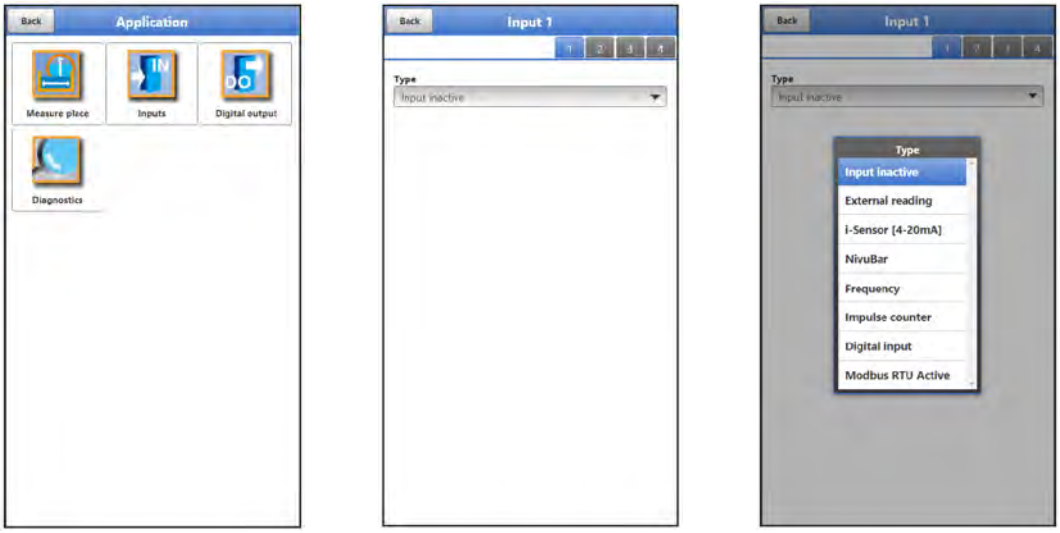

Fig. 39-2 Menu Inputs

The data logger is equipped with four inputs. These are shown in the top right corner of the display and can be selected individually. The selected input is highlighted in colour and the name in the title bar is highlighted with input 1 or 2 or 3 or 4.

The parameters of each input can be set individually. Select the type by using the pop-up menu and then set the parameters.

Default setting: Input inactive

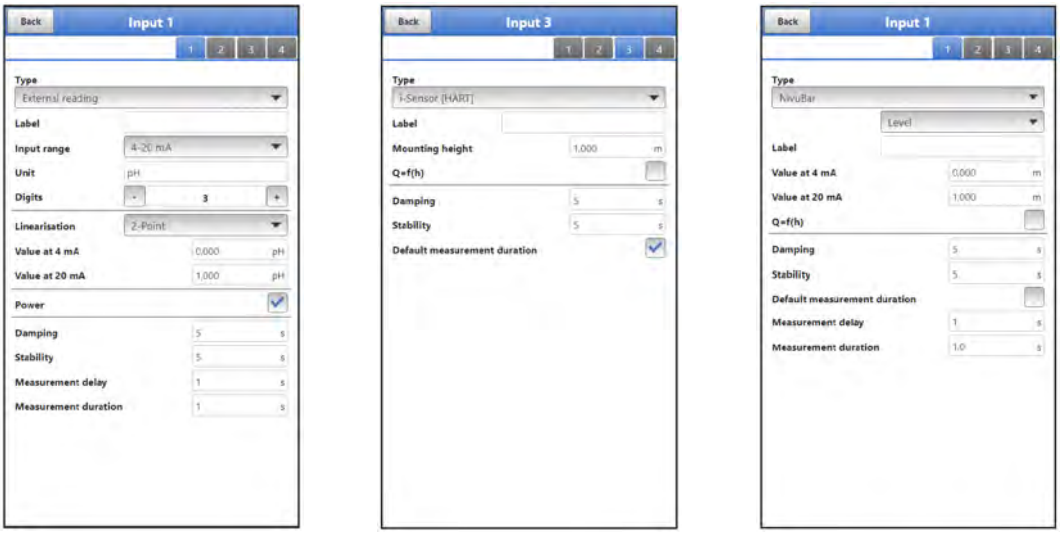

Fig. 39-3 Input as External Measurement Value / i-Sensor (HART) / NivuBar

Possible **>Types<** and values that can be selected/entered:

- **External Measurement Value**
  - **Designation:** manual input
    Input range: >0-20 mA< or >4-20 mA< or >0-10 V<
    Unit: manuelle Eingabe
    Decimal digits: input of the number using the "+" and "-" keys (0…5 possible)
    Linearisation: >2-Point< or >Table<
    - For **>2-Point<** linearisation: manual input of the values for 4 or 20 mA or 0 or

10 V
- For **>Table<** linearisation: enter the number of >Entries< via the "+" and "-" keys (max. 32 possible), then select >Table<, fill in and confirm
Supply: check if required
- Checked: the sensor supply is activated during the measurement cycle
- Unchecked: this input does not require a sensor supply; if the sensor supply is not required for any of the inputs, it remains completely deactivated during the measuring cycle
Damping *3: manual entry in seconds (see info on page 78)
Stability *4: manual entry in seconds (see info on page 78)
Measurement delay: manual entry in seconds
Measurement duration: manual entry in seconds

- **i-Sensor (HART) (only for Input 3)**
  - **Designation:** manual input
    Mounting height: manual input
    Q=f(h) (Q/h Characteristic): check if required
    - Checked: enter the number of >Entries< via the "+" and "-" keys (max. 32 possible), then select >Table<, fill in and confirm
    - Unchecked: no further settings required
    Damping *3: manual entry in seconds (see info on page 78)
    Stability *4: manual entry in seconds (see info on page 78)
    Standard measurement duration: check if required
    - Checked: no further settings required
    - Unchecked: manual entry of measurement delay and measurement duration in seconds

- **i-Sensor (4-20 mA)**
  - **Designation:** manual input
    Value at 4 mA: manual input
    Value at 20 mA: manual input
    Q=f(h) (Q/h Characteristic): check if required
    - Checked: enter the number of >Entries< via the "+" and "-" keys (max. 32 possible), then select >Table<, fill in and confirm
    - **Unchecked:** no further settings required
    Damping *3: manual entry in seconds (see info on page 78)
    Stability *4: manual entry in seconds (see info on page 78)
    Standard measurement duration: check if required
    - Checked: no further settings required
    - Unchecked: manual entry of measurement delay and measurement duration in seconds

- **NivuBar**
  - **Select the type:** >Level< or >Pressure<
    Designation: manual input
    Value at 4 mA: manual input
    Value at 20 mA: manual input
    Q=f(h) (Q/h Characteristic) (only for type >Level<): check if required
    - Checked: enter the number of >Entries< via the "+" and "-" keys (max. 32 possible), then select >Table<, fill in and confirm
    - Unchecked: no further settings required
    Damping *3: manual entry in seconds (see info on page 78)
    Stability *4: manual entry in seconds (see info on page 78)
    Standard measurement duration: check if required
    - Checked: no further settings required
    - Unchecked: manual entry of measurement delay and measurement duration in seconds

- **Frequency (only for Input 1)**
  - **Designation:** manual input
    Minimum: manual input
    Maximum: manual input
    Unit: manual input
    Decimal digits: input of the number using the "+" and "-" keys (0…5 possible)
    Linearisation: >2-Point< or >Table<
    - For **>2-Point<** linearisation: manual input of the values for *"Minimum"* or *"Maximum"* (as defined previously)
    - For **>Table<** linearisation: enter the number of >Entries< via the "+" and "-" keys (max. 32 possible), then select >Table<, fill in and confirm
    Supply: check if required
    - Checked: the sensor supply is activated during the measurement cycle
    - Unchecked: this input does not require a sensor supply; if the sensor supply is not required for any of the inputs, it remains completely deactivated during the measurement cycle
    Pull-up: check if required
    - Checked: if a connected unit has an unconnected (open) collector output, the activated pull-up enables the internal detection of the input signal
    - Unchecked: pull-up deactivated
    Damping *[3]: manual entry in seconds (see info on page 78)
    Stability *[4]: manual entry in seconds (see info on page 78)
    Standard measurement duration: check if required
    - Checked: no further settings required
    - Unchecked: manual input of measurement delay and measurement duration in seconds
- **Impulse Counter (only for Input 1) (e.g. for Rain Gauge RMT0)**
  - **Designation:** manual input
    Unit: manual input
    Decimal digits: input of the number using the "+" and "-" keys (0…5 possible)
    Increment: manual input
    Absolute counter: check if required (for Rain Gauge RMT0 uncheck)
    - Checked: the determined values are specified relatively
    - Unchecked: the determined values are specified absolutely
    Edge: >falling< or >rising>
    Filter: manual input in milliseconds
    Supply: check if required
    - Checked: the sensor supply is activated during the measurement cycle
    - Unchecked: this input does not require a sensor supply; if the sensor supply is not required for any of the inputs, it remains completely deactivated during the measurement cycle
    Pull-up: check if required (uncheck if the jumper (short circuit bridge) is plugged to reduce power consumption)
    - Checked: if a connected unit has an unconnected (open) collector output, the activated pull-up enables the internal detection of the input signal
    - Unchecked: pull-up is not activated
- **Digital Input**
  - **Designation:** manual input
    Logic: >not inverted< or >inverted<
    Filter: manual input
    Supply: check if required
    - Checked: the sensor supply is activated during the measurement cycle
    - Unchecked: no further settings required
    Pull-up: check if required
    - Checked: if a connected unit has an unconnected (open) collector output, the activated pull-up enables the internal detection of the input signal
    - Unchecked: pull-up deactivated

- **Modbus RTU Active**
  Asynchronous activation of Modbus communication
  - **Designation:** manual input
    Logic: >not inverted< or >inverted<
    Filter: manual input
    Pull-up: check if required
    - Checked: if a connected unit has an unconnected (open) collector output, the activated pull-up enables the internal detection of the input signal
    - Unchecked: pull-up deactivated

**3) Information on damping:*

This menu point allows you to change the damping of measurement values in seconds. The damping refers to all input values that are available. Individual values cannot be selected and damped differently. All input values are stored over the specified time range and a moving average is calculated for each individual input value. This average value is used for further calculation.

The entry is made in steps of 1 second each.

Default setting: 30 s

**4) Information on stability:*

Stability is the time span within which the data logger bridges the values without a correct measurement, i.e. when receiving invalid input values. The data logger operates during this period with the last valid measured value. If the specified time span is exceeded without a correct value being recorded, the data logger goes to the input value "0", taking into account the set damping. The data logger does not save a value.

The entry is made in steps of 1 second each.

Default setting: 30 s

39.3 Menu Digital Output

The data logger is equipped with one digital output.

Default setting: Output inactive

The following different functions can be assigned to the digital output.

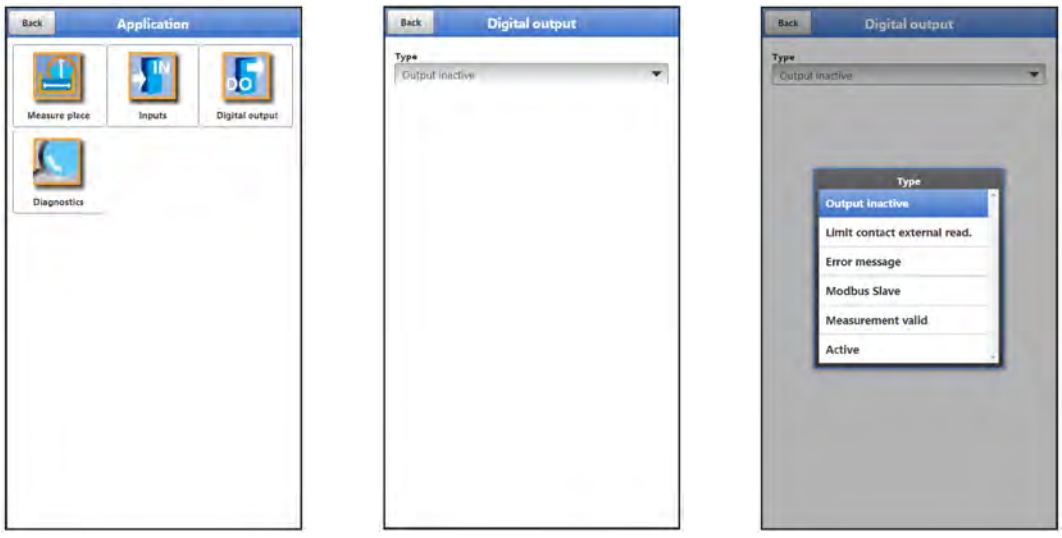

Fig. 39-4 Menu Digital Output

Possible **>Types<** and values that can be selected/entered:

- **Limit Contact external Reading**
  A digital signal is output when the entered high external reading limit value is exceeded. If the flow falls below the low external reading limit value, this digital signal is reset = hysteresis function to prevent fluttering outputs.

  - **Logic:** >Normally open< or >Normally closed<
    Analogue input: >Input 1< or >Input 2< or >Input 3< or >Input 4<
    Threshold On: manual input
    Threshold Off: manual input
    Amount: check if required; if the check mark is set, the setting applies to the positive and the negative range
    Value at error *[5]: >Off< oder >On< or >Hold Value< (see info on page 79)
    Delay *[6]: manual input (see info on page 79)
    Hold *[7]: manual input (see info on page 79)

- **Error Message**
  By activating the individual selection fields (check box) using the push button, the individual error types to be output can be assigned to the digital output.
  Furthermore, the output logic can be changed between normally closed and normally open function.
  - **Logic:** >Normally open< or >Normally closed<
    Error mask:
    External reading: check if required (no further settings required)
    System: check if required (no further settings required)
- **Modbus Slave**
  The digital output can be controlled by an external Modbus master.
  - **Logic:** >Normally open< or >Normally closed<
- **Measurement invalid**
  If the NLG02 takes measurements as a Modbus slave for a Modbus master, it goes back to sleep mode after the measurement. In this condition, the Modbus master cannot address it. With the help of this function, the digital output of the NLG02 is used to signal the Modbus master: "The measurement is finished". For the duration of the defined hold time, the NLG02 then remains awake so that the Modbus master can contact it if necessary.
  - **Logic:** >Normally open< or >Normally closed<
    Hold *[7]: manual input (see info on page 79)
- **Active**
  As soon as the data logger "wakes up" from sleep mode, the digital output is switched; when switching to sleep mode, the digital output is also switched off again. With this switching on/off, the signal is sent to the external system/sensor that the measurement can/should now take place.
  - **Logic:** >Normally open< or >Normally closed<

[5] Info on Value at Error:

If a measurement value error occurs (measured value is recognised as invalid by the system), the reaction of the digital output can be defined. A distinction can be made between "Off" (relay energised), "On" (relay de-energised) and "Hold value" (relay remains in the position where it was before the error).

[6] Info on Delay:

By entering a delay time, the relay only switches when the conditions for the state to be output are present without interruption for at least this entered delay time and also continue to be present at the time switching point. This function is often used to ignore short-term limit value violations (caused by sloshing water, waves, brief pumping processes or similar).

The entry is made in steps of 1/10 second each.

Default setting: 0.0 s

[7] Info on Hold:

Entering a hold time has the exact opposite effect as the delay time. Here, a reaction of the digital output can be prevented by entering the time when a limit value is briefly undershot. At the same time, this parameter also offers the possibility to set a required minimum output time even with only very short pending limit values.

The entry is made in steps of 1/10 second each.
Default setting: 2.0 s

39.4 Menu Diagnostics

Fig. 39-5 Menu Diagnostics

The menu >Diagnostics< can be found in the >Application< menu.

In the Diagnostics menu and the two submenus, current settings of the inputs and the digital input can be displayed.

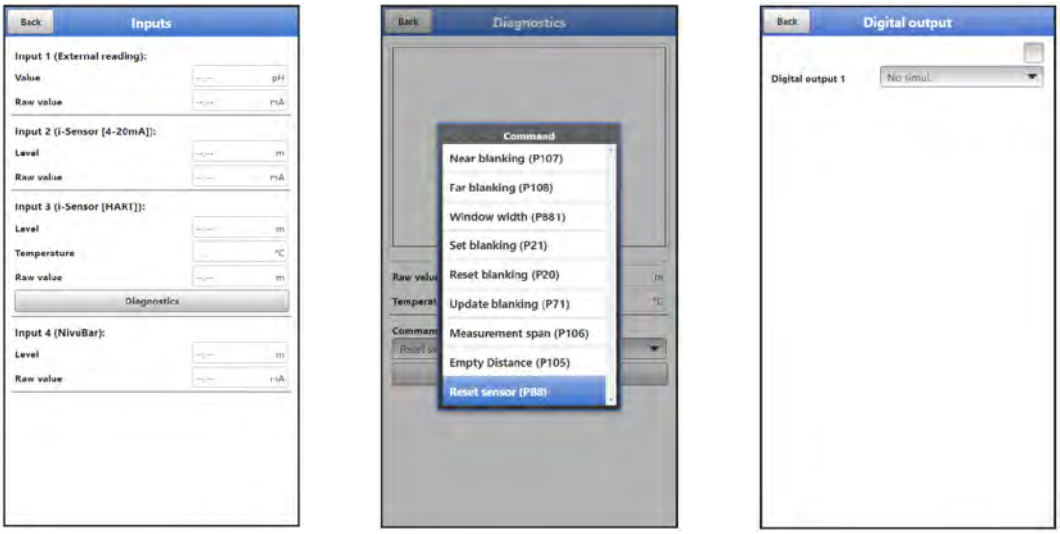

Fig. 39-6 Diagnostics inputs / digital output

Depending on the previous parameterisation under >Application< / >Inputs<, different data and values are displayed.

Shown for the **>Inputs<**:

- **>External Reading<:**
  Value: output calculated value
  Raw value: value actually measured
- **>i-Sensor (HART)<:**
  Level: output calculated level
  Temperature: actual measured value
  Raw value: actual measured value
  In addition, various **commands** can be sent to the i-Sensor here by selecting the

"Diagnostics" button (see Fig. 39-6 centre figure): "Near Blanking (P107)", "Far Blanking (P108)", "Window Width (P881)", „"Set Blanking (P21)", "Reset Blanking (P20)", "Update Blanking (P71)", "Measurement Span (P106)", "Empty Distance (P105)" and "Reset Sensor (P88)".

Expert knowledge required

These settings require extensive expert knowledge and require the use of NIVUS commissioning personnel or an authorised specialist company.

Observe also the instruction manual for i-Series sensors and HART PC software.

- **>i-Sensor (4-20mA)<:**
  Level: output calculated level
  Raw value: value actually measured
- **>NivuBar<:**
  Level: output calculated level
  Raw value: value actually measured
- **>Frequency<:**
  Value: output calculated value
  Raw value: value actually measured
- **>Impulse Counter<:**
  Value: output calculated value
  Raw value: value actually measured
  Reset: reset counter; enquiry is made, cancel possible by "No"
- **>Digital Input<:**
  Check for **value** if required: output value, considering the parameterised logic (normally open/normally closed)
  Check for **raw value** if required: value actually measured

For **>Digital Output<**,

- the actual state of the output is displayed:
  - Checked: digital input active
  - Unchecked: digital input not active
- a simulation of the digital output is activated by:
  - >Simulation On<: box is checked and thus an active digital input is simulated (independent of the actual parameterisation)
  - >Simulation Off<: box is not checked and thus an inactive digital input is simulated (independent of the actual parameterisation).
  - >No Simul.<: ends the simulation and displays the actual parameterisation situation again

40 Parameter Menu Data

Fig. 40-1 Menu – Data

The data menu allows access to all internally saved measurement values. It is divided into two submenus.

40.1 Menu Trend

The trend display is a visualising recorder function. When the trend display is selected, current and previously stored (historical) measurement data can be accessed.

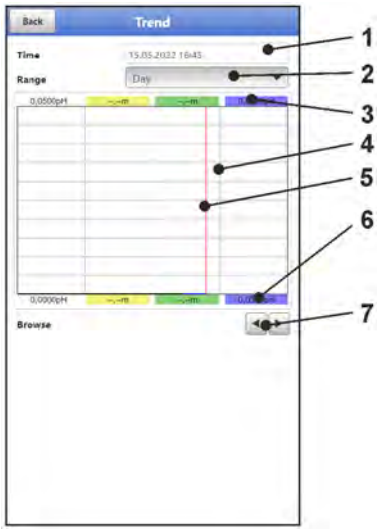

1 Date/Time Selection
2 Range of representation
3 Automatic scaling for max. range
4 Representation screen with guides
5 Date/timeline (selected point in time)
6 Automatic scaling zero point
7 Browse (back/next)

Fig. 40-2 Representation Trend Graph

Current Measurement Data

➲ Procedure for the representation of current readings:

1. Select the desired range (range of representation; Fig. 40-2 Pos. 2).
   The selected range (up to the current time) is displayed. During the display, there is no automatic updating of the measurement data (the current measurement data is shown in the lower third of the main screen).
2. If necessary, use the arrows (Fig. 40-2 Pos. 7) to scroll forwards and backwards with the same basic display setting.
3. Back to the main screen via "Back" (3x).

>Time<

When the Trend menu is opened, the current date and time are displayed. If historical measurement data or a specific point in time is to be displayed, this can be set via the date/time selection (Fig. 40-2 Pos. 1). The selection mask shown below opens here (Fig. 40-3). If a start date is selected, (depending on the range set) the measurement data is shown in the display area below.

Fig. 40-3 Selecting Date/Time

>Range (Period of representation)<

The selection of the range determines which period is to be displayed in the display area.

Selection	Representation in the Display Area		
	Left Margin	**Right Margin**	**Guides**
Hour	0 Minutes	59 Minutes	15 Minutes each
4 Hours	0/4/8/12/16/20 o'clock, depending on the set time	4 Hours later	1 Hour each
Day	0 o'clock	24 o'clock	6 Hours each
Week	Monday, 0 o'clock	Sunday, 24 o'clock	1 Day each
4 Weeks	Monday, 0 o'clock	4 Weeks later, Sunday, 24 o'clock	1 Week each, time reference point for the start: 01.01.1970, 0 o'clock

Tab. 9 Explanation of the periods displayed

Below the display you can find the **>Browse< function**.

➲ Browse forwards or backwards using the arrow symbols: by one selected period unit (Hour, 4 Hours, Day, Week or 4 Weeks) each time the button is pressed.

40.2 Menu Data Memory

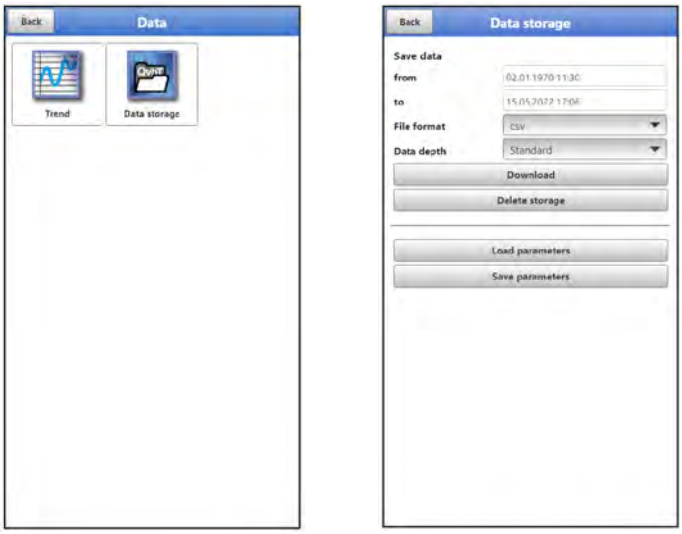

Fig. 40-4 Menu Data Memory

The data logger has an internal data memory (max. 80,000 measuring cycles, after which it is overwritten). The data and parameters stored in it can be transferred partially or completely to a file or to a USB stick.

The parameters can be (re)transmitted back to the data logger, but the (measurement) data cannot.

Use of the USB interface is only permitted outside the Ex area.

➲ Procedure:

1. Open the enclosure flap according to Chap. "23 Open / Close the Data Logger Enclosure".
2. Insert the corresponding USB cable into the Micro-USB interface.
3. Connect the NLG02 to the notebook/PC via USB cable.
4. Transmit data with >Load Parameters< or >Save Parameters<.
5. Disconnect the USB cable and close the enclosure flap.

Fig. 40-5 Set start/end time

- **>from< / >to<**
  Sets the start and end time of the period from which the data to be transmitted originates. The selection is made in a kind of calendar (Fig. 40-5).
  Per default, the data logger offers the transmission period since the last data transmission up to the current time.
- **>File Format<**
  >csv< or >txt<
- **>Data Depth<**
  The data depth is divided into three areas. The respective contents are highly dependent on the measurement place and are therefore not listed in detail here.
  - **>Standard<**
    This memory format is sufficient for most applications and corresponds with the default setting.
  - **>Extended<**
    The stored data records contain extended information.
  - **>Expert<**
    In this software version, the data depth >Expert< is identical to the data depth >Extended<. As part of the usual further development of the devices, subsequent software versions may well contain other functions and data.
    Such data sets should only be activated by specially trained service personnel or developers of the NIVUS GmbH. These data sets can quickly become very large. If necessary contact NIVUS.
- **>Download<**
  With this function, the measured values of the predefined period can be saved to a file on the operating device (notebook, PC etc.). The storage format is either "csv" or "txt" depending on the previous selection.
- **>Delete Memory<**
  The complete data of the internal data memory can be deleted here. After selecting, you will be asked whether you want to delete. After confirming with >Yes< the data is deleted, with >No< the process is cancelled.

Deleted data cannot be restored!

- **>Load Parameters<**
  With this function a previously saved parameter file can be loaded from notebook/PC to the data logger.
- **>Save Parameters<**
  Here the set parameterisation of the measurement place can be loaded to the notebook or PC. Here two files are created and saved.
  The files have the following formats:
  - **XXXX_DOC_AABBCCDDEE.pdf**
    This file is for documentation purposes and contains basic settings and parameter changes made.
  - **XXXX_PAR_AABBCCDDEE.xmz**
    This file contains the complete parameter set of the data logger. It is used to save the parameterisation that has been set and can be reloaded in this format by using >Load Parameters<.

    Information on File Naming:

XXXX	=	Programmed name of the measurement place
AO	=	Year
BB	=	Month
CC	=	Day
DD	=	Hour
EE	=	Minute

41 Parameter Menu System

41.1 Menu Information

Fig. 41-1 Menu – System – Information

The menu >Information< is a display menu. It contains the following information on the device:

- Serial number and article number
- Firmware version of the data logger
- Date of the last software update (firmware) and the last parameter storage
- Information about Open Source Software used (Credits/Licences)

41.2 Menu Country Settings

In this menu you can make the following settings:

- (Operating) Language
- Date Format
- Units of the measurement values
  Here it is possible to distinguish between displayed and stored measured values.

Fig. 41-2 Country Setting - Language - Date Format

41.2.1 (Operating) Language

All listed languages (Fig. 41-2) provide texts in the national language or the substitute language English.

41.2.2 Date Format

The following date formats can be set:

- DD.MM.YYYY (Day/Month/Year)
- MM/DD/YYYY (Month/Day/Year)

41.2.3 Units

At this point, various country-specific and unit system-dependent settings for the measurement values can be set.

>Decimal Separator<

- Dot
- Comma

The decimal separators entered here are only used for the display of the notebook/PC.

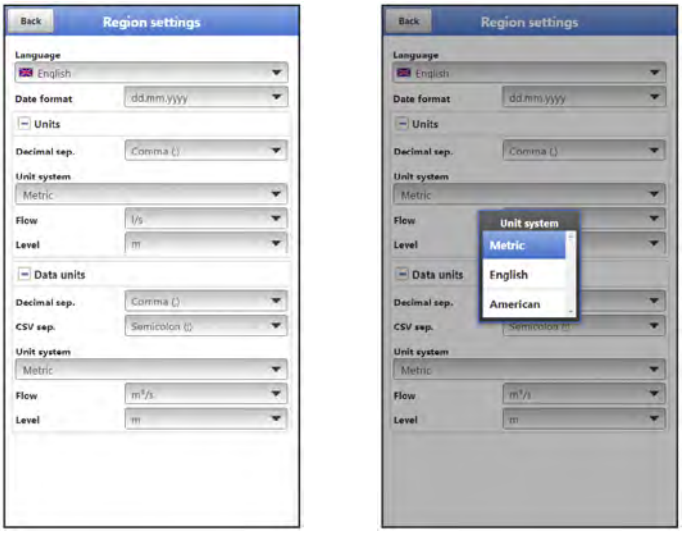

Fig. 41-3 Units system

>Units System<

The choices are:

- Metric
- English
- American

The **adjustable units** depend on the previous selection of the unit system:

- In metric systems: mm, cm, l/min, m³/h etc.
- In the English system: ft³/s, Mgal/d, gal/s, in, yd, °C, °F etc.
- In the American system: gps, cfd, in, ft etc.

Units for the representation in the display for

- Flow
- Level
- Temperature (only in unit system "English")

41.2.4 Data Units

The settings >Data Units< are analogous to the settings of the >Units<.

In the **>Units Storage<** the units for the archive data download are configured.

>Decimal Separator<

- Dot
- Comma

The specification of the decimal separators is important for the correct reading of the data. This is especially important when evaluating the measurement data with a software in a different language (e.g. English Excel), that the decimal separators are correctly selected.

>CSV Separator<

- Comma (,)
- Semicolon (;)

This selection determines how the individual data are separated in the .csv file when reading out the data.

>Units System<

The choices are:

- Metric
- English
- American

Units for the Storage

- In the metric system: l/s, m^3/s, m^3/d, cm/s etc.
- In the English system: ft^3/s, in, gal/min, Mgal/d, in/s, yd/s etc.
- In the American system: gps, gpm, cfs, cfm, cfh, cfd, mgd etc.

Units for the Storage of Measurement Data for

- Flow
- Level
- Temperature (only in unit system "English")

41.3 Menu Time/Date

In this submenu, the current date and the system time of the data logger can be changed manually. The system time is based on the coordinated universal time UTC (Universal Time Coordinated). The time zones are defined by "plus" or "minus" hours compared to UTC.

NIVUS strongly **recommends** keeping the system time of the data logger and defining the respective time zone and also summer/winter times by the >Time Zone (UTC)<.

With **>Change System Time<** the manually changed system time and the time zone are applied.

Via **>Synchronise System Time<** the system time and time zone are automatically synchronised with the connected computer.

Using the >Time/Date< menu may be necessary for the time changeover from summer time to winter time, after a battery-free period of approx. 6 hours (max. buffer time of the internal buffer capacitor) or after a power failure.

If the data logger is operated for a longer period of time, the internal clock may deviate. These deviations can be corrected here.

Effects of a System Time Change

Changing the system time affects the storage of the data. If data storage is activated, duplicate data or data gaps may occur after system time changes.

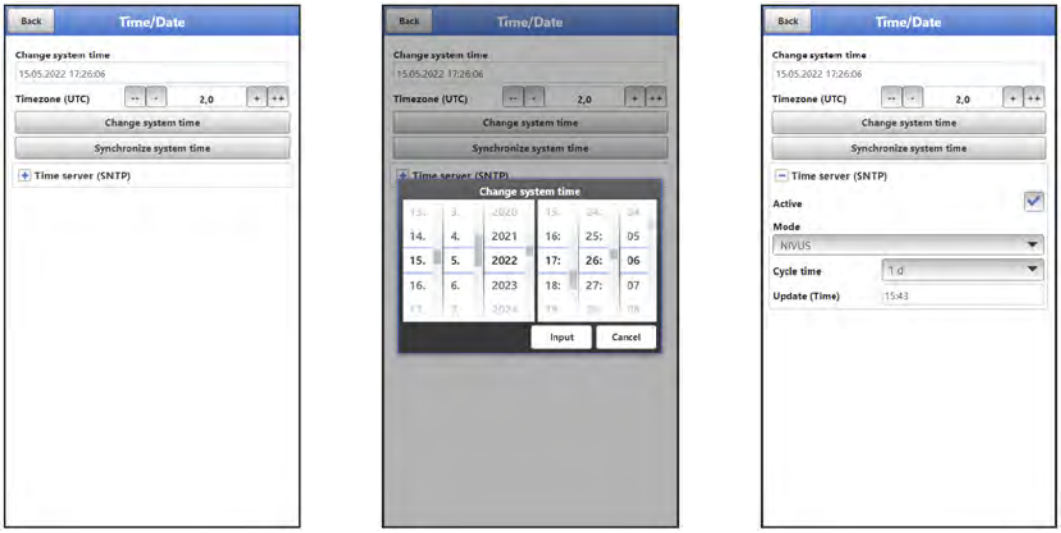

Fig. 41-4 Change system time: automatically and manually

The current system time is set via the selection menu (Fig. 41-4).

The time deviation (UTC or GMT) from the prime meridian is done via the "+" and "-" fields:

--	=	Decrease by 1 hour each
-	=	Decrease by ½ hour each
+	=	Increase by ½ hour each
++	=	Increase by 1 hour each

If **>Time Server (SNTP)<** is activated, the data logger is automatically synchronised with a time server. The SNTP protocol is used for this.

For this purpose, the >Mode< is selected here (NIVUS or User defined), the >Cycle Time< is defined (1 d, 2 d, 3 d, 4 d or 7 d) and the time for the respective >Update (Time)<.

In >Mode< "User defined", the server path must also be entered.

41.4 Menu Error Messages

In this menu, the current pending error messages can be called up and the error memory can be erased. Before deleting, a query is made.

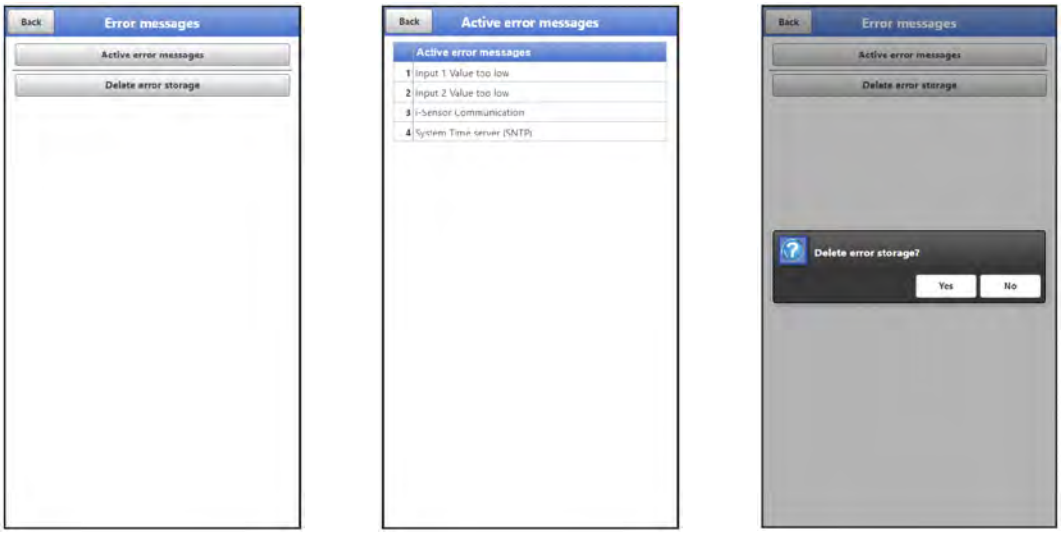

Fig. 41-5 Error messages

41.5 Menu Service

This submenu contains the following functions:

- Service levels (secured with passwords); the service levels are exclusively reserved for the NIVUS service
- Restart (of system)
- Powerdown (switching off the data logger to energy-saving mode)
- Parameter reset (back to default settings)
- Feature Unlock
- Update NivuLink Micro II

Fig. 41-6 Service NivuLink Micro II / NivuLink Micro II Ex

41.5.1 Service Level

The service levels are divided into different access levels and protected accordingly with passwords.

The settings possible there and the information stored require extensive specialist knowledge and are not required for the usual applications. Therefore, they are reserved exclusively for NIVUS service personnel.

41.5.2 Restart

A restart of the data logger interrupts the current measurement process.

The system boots using the set (saved) parameters. After booting, the system behaves as when it is switched on (analogous to the PC).

This menu point replaces switching the system off and on again. All saved parameters, counters and stored data are retained.

41.5.3 Powerdown

The >Powerdown< function switches the data logger into a permanent energy-saving mode. The unit will not resume its measuring function until it is "woken up" using the magnet.

41.5.4 Parameter Reset

During parameter reset, all parameters are reset to the default settings. Counter readings, changed passwords and stored measurement data are retained in the system.

The actual resetting of the parameters is only carried out after exiting the service menu (back to the main menu) and confirming the storage. The process can still be cancelled at this point.

41.5.5 Feature Unlock

Special (optionally available) functions can be enabled via the feature unlock, provided these have been ordered from NIVUS.

Info:
The following is an example of the procedure for activating the licence "FTP/SMTP Client" (NFM LIZENZ FTP). The procedure for all other optionally available functions is similar.

Function Description "FTP/SMTP Client"

The remote data transmission can be transmitted via different channels. Basically possible:

- Via MQTT to the NIVUS WebPortal or to a customer system via NIVUS DataKiosk
- Via FTP to the NIVUS D2W data portal to a customer FTP server
- Via e-mail to a pre-defined address

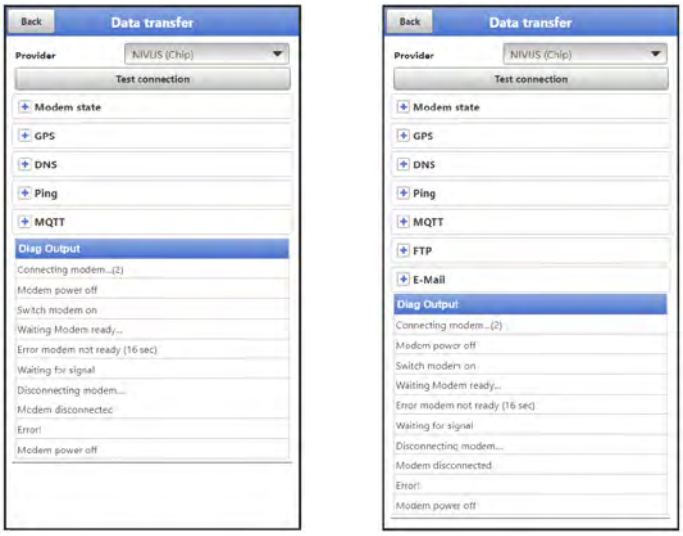

Fig. 41-7 Menu Communication: without licences / with licences

All NivuLink Micro II / NivuLink Micro II Ex data loggers are delivered in the basic version with the version for "MQTT Data Transmission". This variant is automatically activated and available immediately after the initial commissioning and corresponding activation of MQTT.

Data transfer via FTP and e-mail is additionally available via a combined licence and can either be ordered when placing the order or subsequently at any time.

The link to the NIVUS WebPortal (for the activation of this licence) will be sent by e-mail to the customer or the responsible country representative *8 after dispatch of the ordered device or following the subsequent licence order. Manual activation is carried out by the user *8 (see Chap. "Activation of the Licence"). As soon as the NivuLink Micro II is parameterised accordingly, the data transmission variant can be selected and the data transmission started.

⇨ Parameter settings see Chap. "42 Parameter Menu Communication" (for the described example).

One licence is only valid for exactly **one device** and is permanently assigned to it through the **serial number**.

**8) Depending on the recipient country, the licence is activated by the responsible country representative even before the unit is shipped to the customer; all ordered features are then immediately available to the customer.*

Activation of the Licence

➲ Procedure for **ordering a device with a licence** using the example of "FTP/e-mail data transfer":

1. Place order for NivuLink Micro II / NivuLink Micro II Ex device with the respective licence(s) for remote data transmission.
   Internally at NIVUS, processes are started which, on the one hand, concern the production of the NLG02 device and, on the other hand, initiate the licensing process.
2. After receiving the NLG02 device, log in to the NIVUS WebPortal and open the "Licences" tab. The access data was sent in advance by NIVUS via e-mail to an agreed e-mail address.

Assignment of the licence to the device unchangeable after being carried out

*One licence is only valid for exactly one device and is permanently assigned to it through the serial number. This assignment **cannot be changed** or **cannot be undone**.*

Before assigning, check exactly which device must/should be linked to which licence so that the correct device also receives the licence and can use this feature.

3. The existing NLG02 device(s) is/are listed in the NIVUS WebPortal. The ordered licences are displayed in the right-hand display field. These licences must be linked to the units via the serial numbers.
   To do this, select the corresponding licence and click on "Activate". The selected licence disappears from the right-hand display field, but the associated licence number with the activation code is displayed on the unit. This activation code is subsequently required (once) for the parameterisation of the individual devices.
4. Proceed in the same way with other licences.
5. Log out from the NIVUS WebPortal and exit the application.

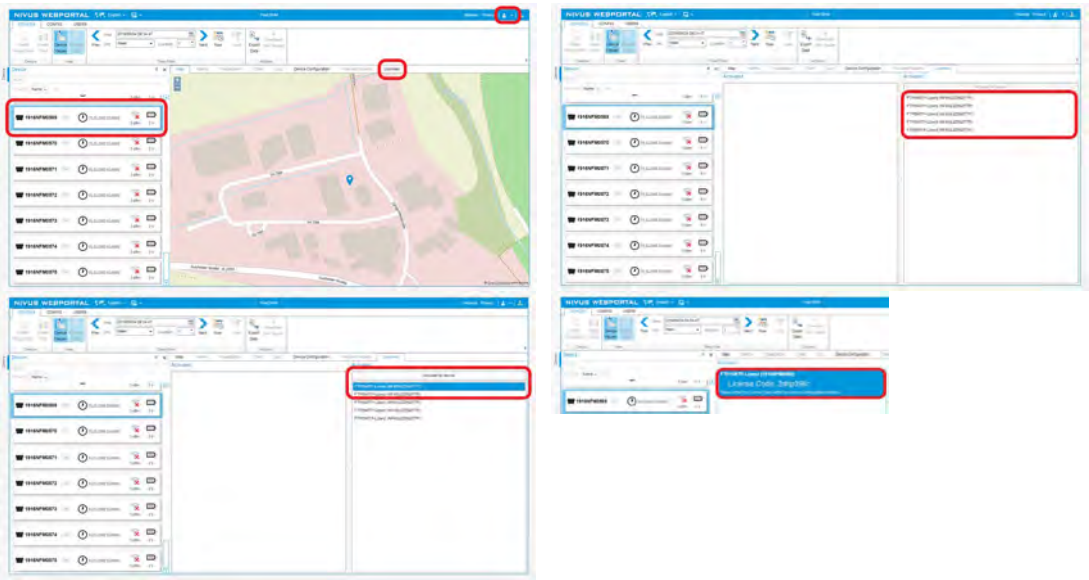

Fig. 41-8 Activation and licence in the WebPortal (principle)

6. Open the respective NLG02 via notebook, PC and select >Feature Unlock< (Fig. 41-9) in the >System< / >Service< menu.
7. Click the >Feature Unlock< button.
8. Enter the corresponding activation code and confirm with Enter. The linked licence is shown in the display.

Fig. 41-9 Activation of the licence in the NLG02 display tool

9. The NLG02 confirms the activation and with "Back" requests a device restart. In the menu >Communication< / >Data Transmission<, the data transfer via FTP / e-mail option is now available.

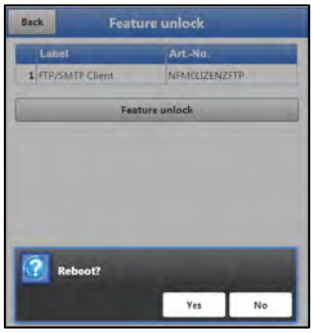

Fig. 41-10 System restart after feature unlock

10. Select/enter and save parameters in the >Communication< menu.

➲ Procedure for **later ordering the licence** "FTP/E-Mail Data Transmission“:

1. Place order for the desired licence(s) for data transmission.
   Internally at NIVUS, processes are started which initiate the licensing process.
2. After receiving the access data, log in to the NIVUS WebPortal and open the "Licences" tab. The access data was sent by NIVUS via e-mail to an agreed e-mail address.
3. Proceed with step 3 from the description "Procedure for Gerätebestellung mit Lizenz using the example of the "FTP/E-Mail Data Transmission““.
   Please also note the important information on "Assignment of the licence to the device" on page 93.

41.5.6 Update NivuLink Micro II

Upload of a NivuLink Micro II / NivuLink Micro II Ex firmware saved on a drive of the connected notebook/PC.

Important Notice

Update only in consultation with NIVUS GmbH or the responsible local (country) representation.

41.6 Menu Operating Mode

In the >Operating Mode< menu, the types of >Operating Mode<, the >Storage Cycle< and the >Measurement Duration< are set. Depending on the selected operating mode, the further settings described below are possible.

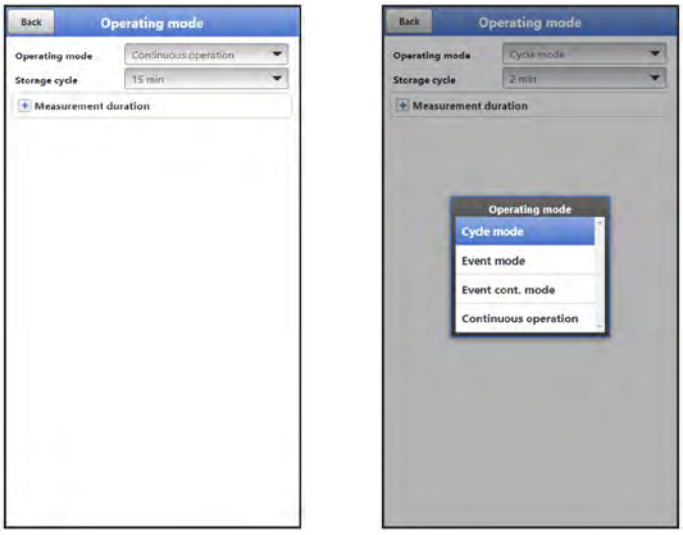

Fig. 41-11 Storage Mode – Operating Mode

The following settings have a significant influence on the individual battery life.

In the "Event Interval" cycle, an increased energy requirement can lead to significantly shorter service lives.

Operating mode, storage cycle, event interval and measurement duration

The selected operating mode determines when and how often the data logger should take measurements and also save them. Depending on the operating mode, the storage cycle and the event interval can be set.

The choices for **>Operating Mode<** are:

- **>Cycle Mode<**
  The data logger wakes up at the intervals of the set storage cycle, measures for a short time and stores the determined measurement values. After that, the data logger goes back to sleep mode until the next measurement.
- **>Event Mode<**
  The event mode is an extended cycle mode. It has the same parameters and functionality as the cycle mode. In addition, it is possible to switch to the >Event Interval< by detecting the exceeding or falling below of a definable measured variable of inputs 1 to 4.
  >Input 1< to **>Input 4<** can be activated individually (check) and the respective switching threshold (manual entry) and the mode (> or <; event starts when the entered value is exceeded or not reached) can be set.
  - If **one** of the inputs is activated, the **>Cycle<** must also be selected: "Storage Cycle" or "Event Interval" are available.
    This >Cycle< defines the (previously set) time interval at which the data logger should search for events.
    If **at least two** inputs are activated, the **>Logic<** must also be selected: Possible are "Or" or "And".

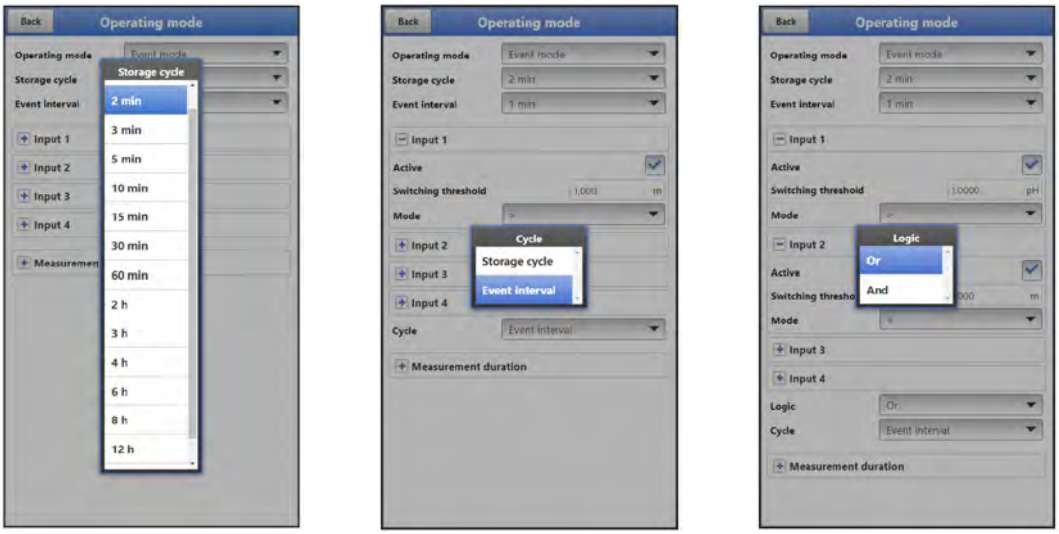

Fig. 41-12 Storage cycle (time interval), cycle and logic

- **>Event Continuous Mode<**
  The event continuous mode and its parameter settings are largely identical to the event mode (for details on settings see the previous section).
  In contrast, the data logger does not switch off cyclically in the event interval during the event to save energy, but measures in continuous operation. The data is damped continuously and stored in the cycle of the event interval.
  The event continuous mode thus consumes slightly more energy than the event mode, but leads to more consistent measurement results for events with strongly fluctuating measured values (e.g. due to waves).

- **>Continuous Operation<**
  The data logger measures continuously, but stores the measured values only at the intervals of the set storage cycle. The permanently determined individual measured values are damped internally here. The average value of the measured values is saved.
  Continuous operation requires energy throughout and is not recommended due to the power supply of the device by batteries.

>Storage Cycle<
With >Cycle Mode<, >Event Mode< und >Event Continuous Mode<: 1 min, 2 min, 3 min, 5 min, 10 min, 15 min, 30 min, 60 min, 2 h, 3 h, 4 h, 6 h, 8 h, 12 h and 24 h
Bei >Continuous Operation<: 30 s, 1 min, 2 min, 3 min, 5 min, 10 min, 15 min, 30 min and 60 min

>Event Interval<
With >Event Mode<: 1 min, 2 min, 3 min, 5 min, 10 min, 15 min, 30 min, 60 min, 2 h, 3 h, 4 h, 6 h, 8 h and 12 h
With >Event Continuous Mode<: 1 min, 2 min, 3 min, 5 min, 10 min, 15 min, 30 min and 60 min

>Measurement Duration<
Setting of the minimum and maximum measuring duration in seconds.
Minimum: 0 s – 900 s (default setting: 1 s)
Maximum: 1 s – 900 s (default setting: 60 s)

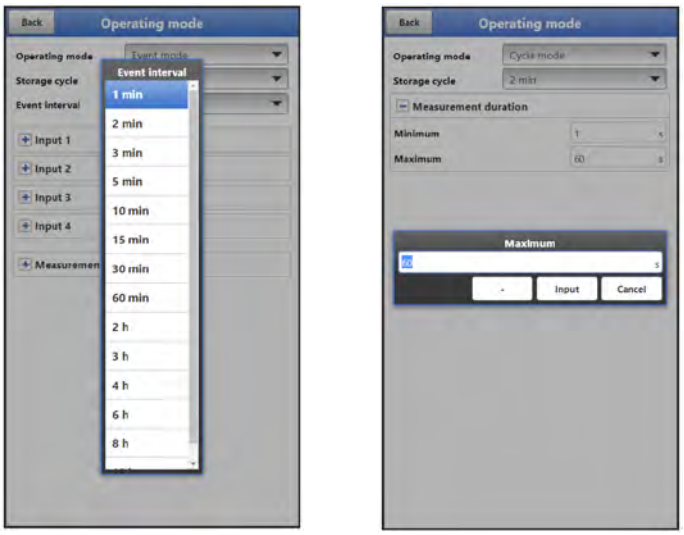

Fig. 41-13 Event interval (time interval) and measurement duration

42 Parameter Menu Communication

In the menu >Communication< the parameters for data transmission/LoRaWAN and for Modbus communication are displayed or set and the access details (user name/password) are managed under HTTP.

Communication is done with the notebook/PC or other devices.

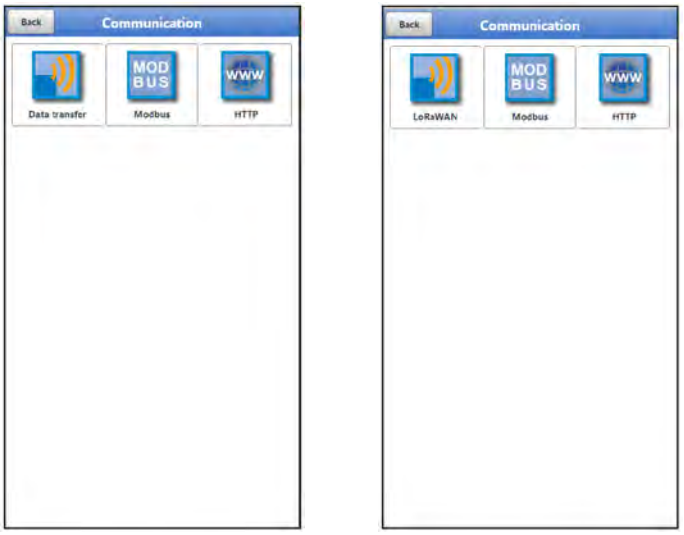

Fig. 42-1 Menu – Communication: Data Transmission or LoRa

42.1 Menu Data Transmission

42.1.1 Provider

Optional use of a SIM card

The use of a SIM card is not absolutely necessary as the device has an integrated SIM chip. This enables data transmission to the NIVUS WebPortal.

See the current Price List: NIVUS WebPortal Packages

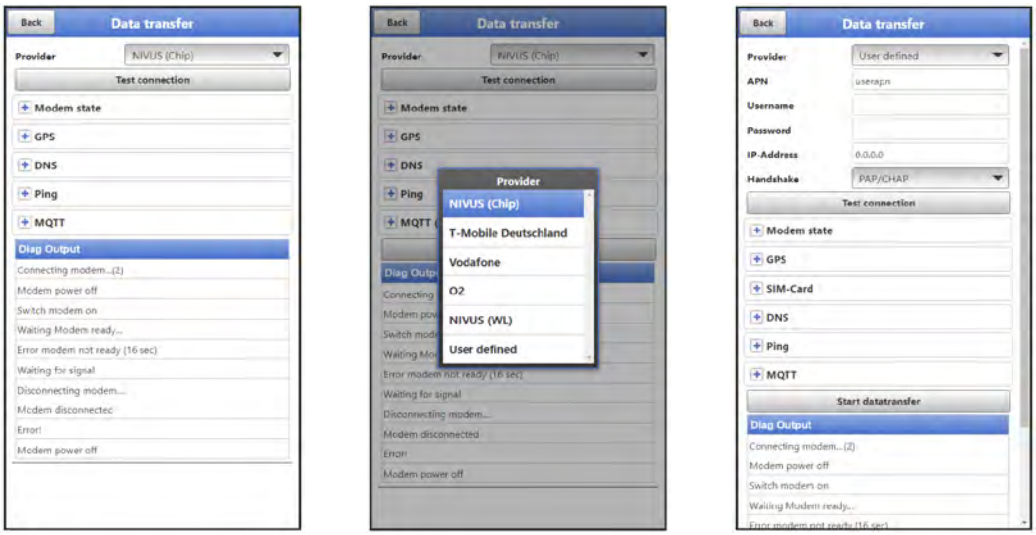

Fig. 42-2 Provider

Depending on the **provider**, individual data must be entered here or is displayed. Data to be entered can be requested from the provider.

Preset data are already stored in the data logger for: "NIVUS (Chip)", "T-Mobile Germany", "Vodafone", "O2" and "NIVUS (WL)".

For "User Defined", missing data must be entered.

After specifying the provider, a **test connection** can be established for test purposes. During the process, a current status info appears in the "Diagnostics Output".

42.1.2 Modem State

Display of the current status of the built-in modem.

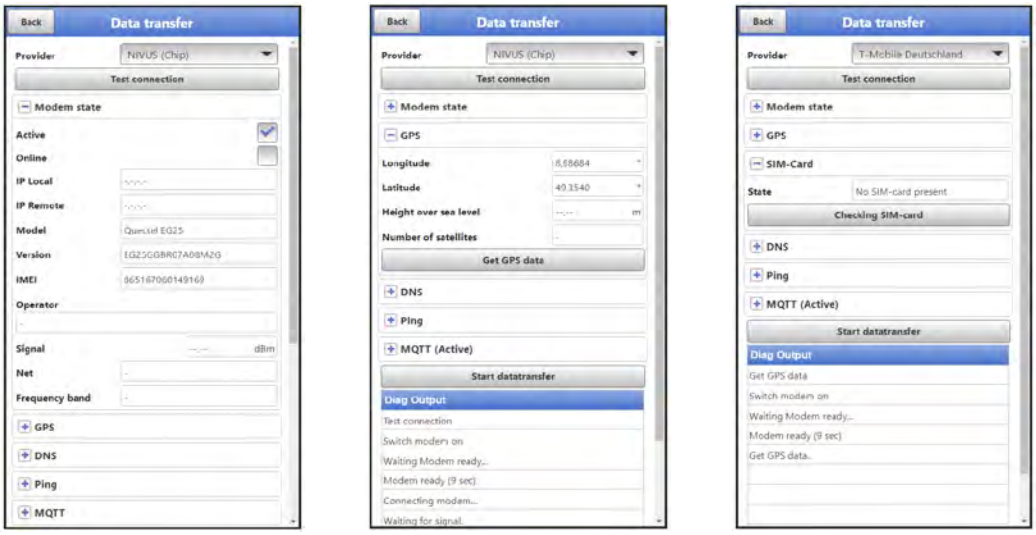

Fig. 42-3 Modem State / GPS / SIM Card State

42.1.3 GPS

Display of or search for GPS coordinates at the installation site (see also Fig. 42-3).

GPS Coordinates Search

The unit must be positioned so that it has a "clear view" up to the sky when searching for the GPS coordinates. So it is best to do this before placing it in the shaft or a room.

42.1.4 SIM Card

With almost all providers (except NIVUS (Chip)), a customer's own SIM card (see also Fig. 42-3) is required to use the modem. To do this, enter the relevant information and, if necessary, activate the PIN check or carry out a SIM card check.

42.1.5 DNS

Addresses of the name servers for address resolution; split into primary and secondary; except if >DNS automatic< is activated, then only primary.

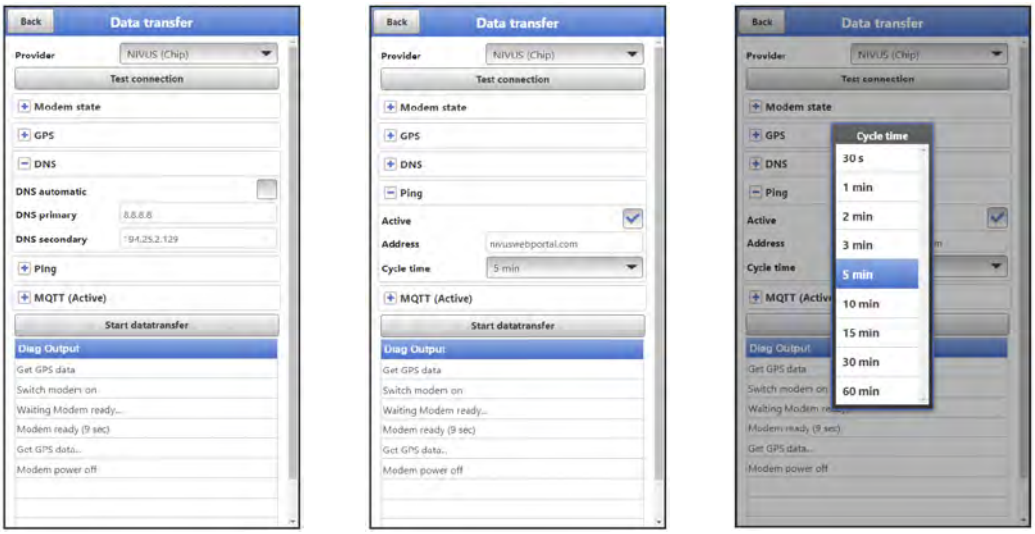

Fig. 42-4 DNS / Ping

42.1.6 Ping

Activate self-test of the modem. Here, a certain address can be entered. The self-test can be repeated in certain cycles.

Possible cycle times are: 30 s, 1 min, 2 min, 3 min, 5 min, 10 min, 15 min, 30 min and 60 min.

Function essentially required for the NIVUS service

This function is important if the modem has to be permanently online, for normal use it is not needed. In a later firmware release, this function will probably only be available in the service level.

42.1.7 MQTT

Using the MQTT network protocol, all data that accumulates in the data memory is sent to an MQTT server.

- **>Active<:**
  Check the box to activate.

- **>Mode<**:
  - **>NIVUS<**: All attributes and addresses for sending the data are stored in the system.
  - **>User Defined<**: Enter all required attributes and addresses.
    >Broker<: The Internet address of the server is entered either as a host name or IP address.
    >Port<: Associated port
    >Encryption<: Activation of secure (SSL/TLS) communication between client and server.
    >User Name<: Individual entry
    >Password<: Individual entry
- **>Time<**:
  Specify by how many hours/minutes the transmission should be shifted from the set transmission rhythm (cycle time). Examples:
  - >Cycle Time< 6 h and >Time< 01:15
    => Transmissions at: 01:15, 07:15, 13:15 and 19:15 o'clock

    But be sure to note: *If the span under >Time< is greater than the span of the >Cycle Time<, the transmissions will still take place in the specified cycle:*
    >Cycle Time< 6 h and >Time< 14:00
    => Transmissions at: 02:00, 08:00, 14:00 and 20:00 o'clock.
- **>Cycle Time<**:
  Within one day, several transmissions can take place according to a frequency to be defined. Available are: 15 min, 30 min, 1 h, 2 h, 3 h, 4 h, 6 h, 8 h, 12 h and 24 h.
- **>Event Mode<**:
  Check this box if transmission is to take place in a different cycle during the active event mode.
  - **>Cycle Time Event<**: Possible times to define the frequency: 15 min, 30 min, 1 h, 2 h, 3 h, 4 h, 6 h, 8 h, 12 h and 24 h
- **>Test Settings<:**
  Establish a test connection to the server with the specified values.
- **>Start Data Transfer<:**
  "Manual" data transmission since the last transmitted time stamp (see also Chap. "42.1.10 Positioning by means of GPS").

Fig. 42-5 MQTT active / cycle time / event operation

42.1.8 FTP (only with licence)

Transmission to a customer FTP server or to the D2W data portal.

Available as an additional function licence (see Chap. "20.2 Add-On Function Licences" and "41.5.5 Feature Unlock").

Option is available only when MQTT is inactive.

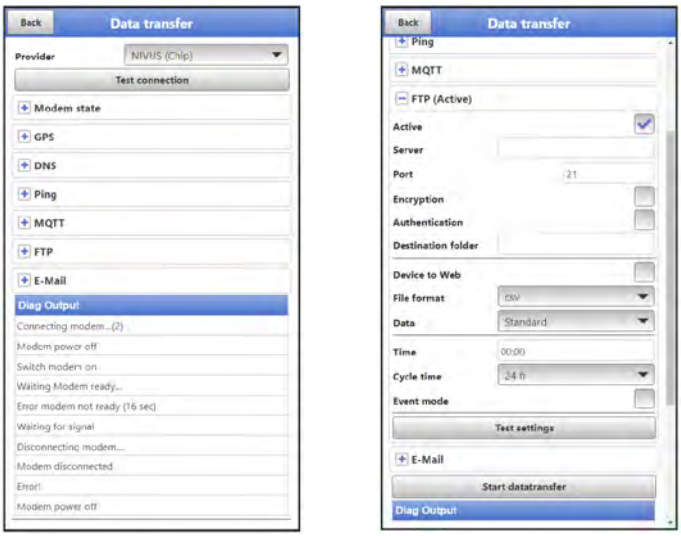

Fig. 42-6 FTP active

- **>Active<:**
  Check the box to activate.
- **>Server<:**
  Specify server name or IP address.
- **>Port<**:
  Associated port
- **>Encryption<:**
  Activation of secure (SSL/TLS) communication between client and server.
- **>Authentication<**:
  Activate with user and password-protected FTP access and specify in user name and password.
- **>Destination Folder<:**
  Enter the destination folder where the files are to be stored.
- **>Device to Web<:**
  Activate when transmitting to the D2W; the Device-to-Web compatible format is used.
- **>File Format<**: (only if the >Device to Web< box is not checked)
  There are csv and txt available.
- **>Data<:**
  Determination of the data depth to be transmitted (see also Chap. "40.2 Menu Data Memory").
  - **>Standard<**:
    Basic data
  - **>Extended<:**
    Extended data package (available only via additional licences; see Chap. "20.2 Add-On Function Licences")
  - **>Expert<:**
    Maximum data package (available only via additional licences; see Chap. "20.2 Add-On Function Licences")

- **>Time<**:
  Specify by how many hours/minutes the transmission should be shifted from the set transmission rhythm (cycle time). Examples:
  - >Cycle Time< 6 h and >Time< 01:15
    => Transmissions at: 01:15, 07:15, 13:15 and 19:15 o'clock

    But be sure to note: *If the span under >Time< is greater than the span of the >Cycle Time<, the transmissions will still take place in the specified cycle:*
    >Cycle Time< 6 h and >Time< 14:00
    => Transmissions at: 02:00, 08:00, 14:00 and 20:00 o'clock.
- **>Cycle Time<**:
  Within one day, several transmissions can take place according to a frequency to be defined. Available are: 15 min, 30 min, 1 h, 2 h, 3 h, 4 h, 6 h, 8 h, 12 h and 24 h.
- **>Event Mode<**:
  Check this box if transmission is to take place in a different cycle during the active event mode.
  - **>Cycle Time Event<**: Possible times to define the frequency: 15 min, 30 min, 1 h, 2 h, 3 h, 4 h, 6 h, 8 h, 12 h and 24 h
- **>Test Settings<:**
  Establish a test connection to the server with the specified values.
- **>Start Data Transfer<:**
  "Manual" data transmission since the last transmitted time stamp (see also Chap. "42.1.10 Positioning by means of GPS").

42.1.9 E-Mail (only with licence)

Transmission to a customer FTP server or to the D2W data portal.

Available as an additional function licence (see Chap. "20.2 Add-On Function Licences" and "41.5.5 Feature Unlock").

Option is available only when MQTT is inactive.

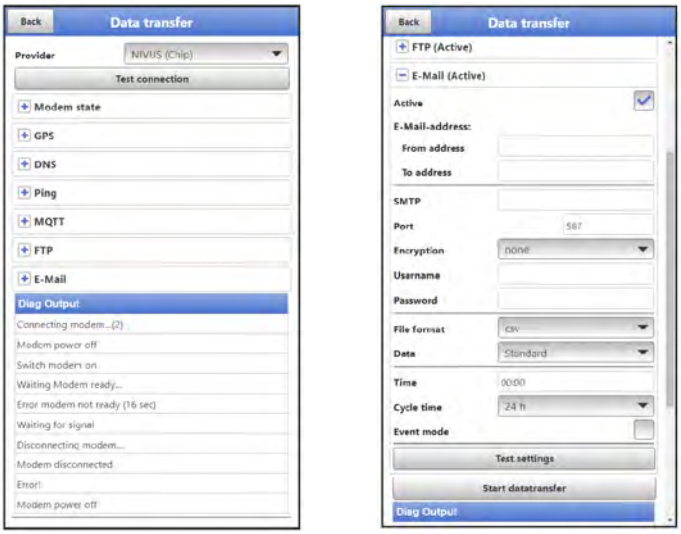

Fig. 42-7 E-Mail active

- **>Active<:**
  Check the box to activate.
- **>E-Mail Address<**:
  - >From<: E-mail sender address (needs to be accepted by the SMTP server)
  - >To<: Enter destination e-mail address

- **>SMTP-Server<**:
  Enter e-mail server name (e.g. mail.gmx.net). Provider must support SMTP (Simple Mail Transfer Protokoll).
- **>Port<**:
  Specify the port of the SMTP outgoing mail server.
- **>Encryption<**
  Can be selected: STARTTLS, SSL or none.
- **>User Name<**:
  Enter the user name of the e-mail box.
- **>Password<:**
  Enter the password of the e-mail box.
- **>File Format<:**
  There are csv and txt available.
- **>Data<:**
  Determination of the data depth to be transmitted (see also Chap. "40.2 Menu Data Memory").
  - **>Standard<**:
    Basic data
  - **>Extended<:**
    Extended data package (available only via additional licences; see Chap. "20.2 Add-On Function Licences")
  - **>Expert<:**
    Maximum data package (available only via additional licences; see Chap. "20.2 Add-On Function Licences")
- **>Time<**:
  Specify by how many hours/minutes the transmission should be shifted from the set transmission rhythm (cycle time). Examples:
  - >Cycle Time< 6 h and >Time< 01:15
    => Transmissions at: 01:15, 07:15, 13:15 and 19:15 o'clock

    But be sure to note: *If the span under >Time< is greater than the span of the >Cycle Time<, the transmissions will still take place in the specified cycle:*
    >Cycle Time< 6 h and >Time< 14:00
    => Transmissions at: 02:00, 08:00, 14:00 and 20:00 o'clock.
- **>Cycle Time<**:
  Within one day, several transmissions can take place according to a frequency to be defined. Available are: 15 min, 30 min, 1 h, 2 h, 3 h, 4 h, 6 h, 8 h, 12 h and 24 h.
- **>Event Mode<**:
  Check this box if transmission is to take place in a different cycle during the active event mode.
  - **>Cycle Time Event<**: Possible times to define the frequency: 15 min, 30 min, 1 h, 2 h, 3 h, 4 h, 6 h, 8 h, 12 h and 24 h
- **>Test Settings<:**
  Establish a test connection to the server with the specified values.
- **>Start Data Transfer<:**
  "Manual" data transmission since the last transmitted time stamp (see also Chap. "42.1.10 Positioning by means of GPS").

42.1.10 Positioning by means of GPS

The NivuLink Micro II / NivuLink Micro II Ex has a built-in GPS module. In order for the respective measurement point to be displayed correctly on the overview map in the NIVUS

WebPortal, i.e. with the correct GPS coordinates, their determination must be carried out correctly during commissioning. There is no automatic update during measurement operation.

Prerequisite

The unit must be positioned so that it has a "clear view" up to the sky. So it is best to do this before placing it in the shaft or a room.

➲ Procedure

1. Activate MQTT by checking the box.
2. Click on the button "Get GPS Data" under GPS.
   Wait until the device has searched for the GPS coordinates (latitude/longitude) and these have been entered in the menu. This may well take a few minutes.
   Without these GPS coordinates, the measuring point will not be displayed correctly on the overview map in the NIVUS WebPortal, but the data will be assigned to the correct measurement place in any case.
3. Check whether MQTT or FTP or e-mail has already been activated and parameterised. If not, set the parameters for the corresponding communication path.
4. Use the >Start Data Transmission< button to send data once to ensure that the connection is successfully established and the GPS coordinates are transmitted.
   The NivuLink Micro II / NivuLink Micro II Ex can then be positioned in its planned installation location.

42.2 LoRaWAN

All data that accumulates in the data memory is sent to gateways of a public or private LoRaWAN network via the LoRaWAN.

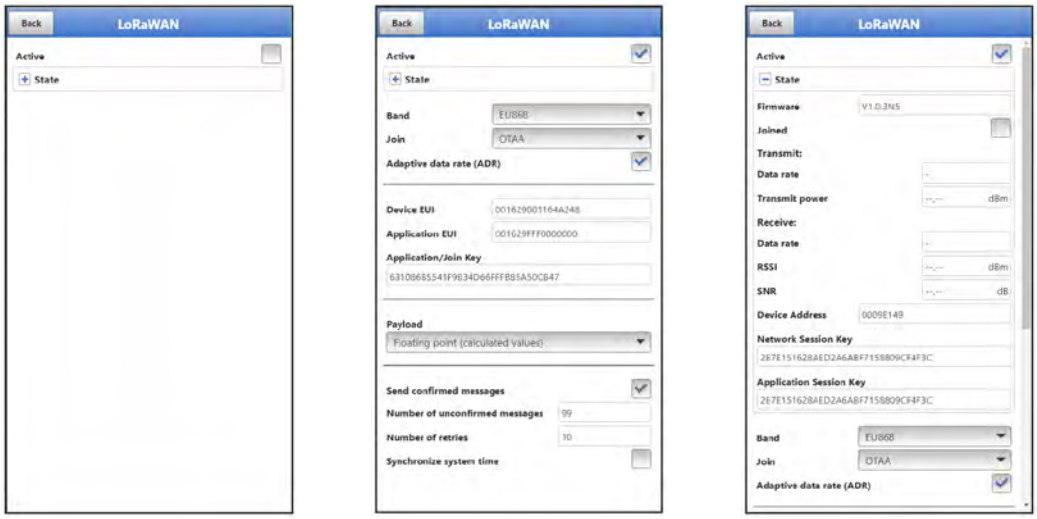

Fig. 42-8 LoRaWAN inactive / Menu / Status

- **>Active<:**
  Check the box to activate.
  Default setting: Not active
- **>Status<**:
  The Status menu is a read-only menu.
  Information on the following attributes is displayed:
  >Firmware<, >Joined<, >Send: Data rate<, >Transmit: Transmit power<, >Receive: Data rate<, >Receive: RSSI<, >Receive: SNR<, >Device Address<, >Network Session Key< and >Application Session Key<.
- **>Band<**:
  Selection of the frequency band to be used for LoRa communication. The decisive factor is the location of the NivuLink Micro II.

Currently supported are:
AS923, AU915, CN779, EU868, KR920, IN865, US915 and RU864
The two letters in the abbreviation stand for the respective country areas and the number for the frequency in MHz.

- **>Join<**:
  Selection between ABP and OTAA for the codes/keys used for NivuLink Micro II and application and their assignment/connection.
  Depending on the selection, other parameters for "Device" and "Application" must be entered below.
  Default setting: OTAA

  - **>ABP<:**
    Manually set codes/keys; this method is less secure and corresponds to an older standard, but can be used.

  - **>OTAA<:**
    Codes/keys defined using the >Application/Join Key<; this "Over The Air Activation" is the current standard and the setting recommended by NIVUS.

- **>Adaptive Data Rate (ADR)<**:
  Check the box to activate or set a fixed **>Data Rate<** using the "+" / "-" buttons. Rates from 0 to 7 are possible.
  Default setting: ticked / activated

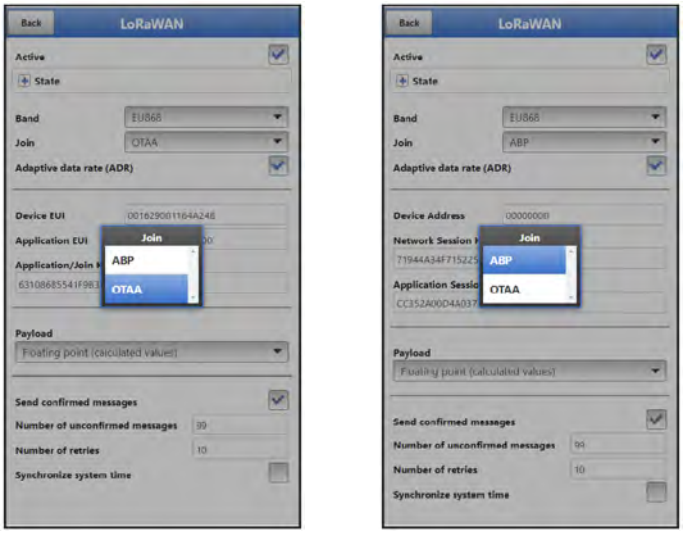

Fig. 42-9 LoRaWAN Join OTAA / Join ABP

- When setting **>OTAA<** under >Join< (setting recommended by NIVUS):

  - **>Device EUI<**:
    Unique hexadecimal code of the respective NivuLink Micro II.
    The code is only displayed here and cannot be changed.
    The Device EUI is included with the NivuLink Micro II on delivery (printout NivuLink Micro II Keys: DevEUI).
    The NivuLink Micro II can be registered with this unique code, e.g. under ChirpStack.

  - **>Application EUI<**:
    Unique hexadecimal code of the respective application.
    This code can be customised by typing it in, but is already entered at the factory.
    The Application EUI is included with the NivuLink Micro II on delivery (printout NivuLink Micro II Keys: AppEUI).

  - **>Application/Join Key<**:
    Code for registering the NivuLink Micro II in the network.
    This code can be customised by typing it in, but is already entered at the factory.

The Application/Join Key is included with the NivuLink Micro II on delivery (printout NivuLink Micro II Keys: AppKey).

- When setting **>ABP<** under >Join<:
  - **>Device Address<**:
    Hexadecimal code individually defined by the customer for the NivuLink Micro II used.
    This code can be entered/customised by typing it in.
    The NivuLink Micro II can be registered with this code, e.g. under ChirpStack.
  - **>Network Session Key<**:
    Hexadecimal code individually defined by the customer for the existing application.
    This code can be entered/customised by typing it in.
  - **>Application Session Key<**:
    Code for registering the NivuLink Micro II in the network.
    This code can be entered/customised by typing it in.

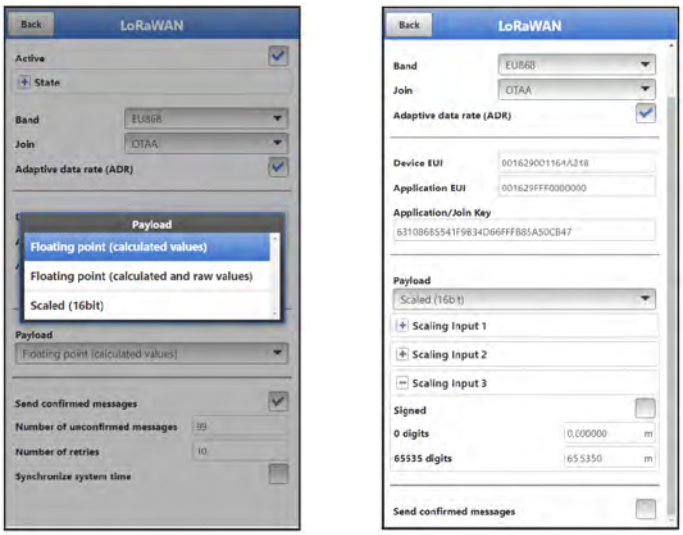

Fig. 42-10 LoRaWAN User Data Pop-Up Menu / Scaled (16bit)

- **>Usage Data<:**
  The amount and type / depth of the data to be transmitted is selected via usage data.
  See also Chap. „Explanations of the three different usage data options“ starting on page 108.
  - **>Floating point (calculated values)<:**
    Transmission of the values calculated from the measured values (raw values) (single precision IEEE floating point number, max. 29 bytes);
    Medium data volume;
    Corresponds to the values displayed in the left-hand column of the NivuLink Micro II main display.
  - **>Floating point (calculated values and raw values)<:**
    Transmission of the values calculated from the measured values (raw values) and the actual raw values (single precision IEEE floating point number, max. 45 bytes);
    Large data volume;
    Corresponds to the values displayed in the left-hand and right-hand column of the NivuLink Micro II main display.
    Suitable for possible further use of the raw values for special analyses.
  - **>Scaled<:**
    Transmission of the calculated values as scaled 16-bit numbers (signed/unsigned); Smallest data volume (11 bytes); corresponds to the values displayed in the left-hand column of the NivuLink Micro II main display

- **>Send acknowledged Messages<**:
  Check the box to activate.
  Default setting: Not active
  If this box is checked, there is an acknowledgement/feedback that the message has arrived at the gateway and in the network. However, this feedback leads to a doubling of the message volume and therefore also of the (transmission) channel utilisation. NIVUS recommend a ratio between messages with acknowledgement and messages without acknowledgement of max. 10:1.
  If the box is not checked, no acknowledgement is requested and the delivery attempts are not repeated.

  - **>Number of messages without acknowledgement<**:
    Definition of the number of messages for which exactly **one message with acknowledgement request** is to be sent.
    Example: With the factory setting, a message with acknowledgement is then requested for message 100 (no acknowledgement is requested for the 99 previous messages).
    Please note the previous explanation on **>Send acknowledged Messages<**.
    Manual input.
    Default setting: 99

  - **>Number of repetitions<:**
    The NivuLink Micro II sends the message with acknowledgement request again and again until an acknowledgement of successful delivery is sent back.
    If the delivery is still not successful, the NivuLink Micro II attempts to register in the network again (re-join).
    The number of these delivery attempts is entered manually here.
    Default setting: 10

  - **>Synchronise System Time<**:
    Check the box to activate. When this function is activated, the NivuLink Micro II is synchronised with the network time. If all devices in the network are synchronised, they all transmit at the same time. This may lead to a network overload. To prevent this, the network can be relieved by entering a time shift for the **>GPS Leap Seconds<**.
    Default setting: Not active

    - **>GPS Leap Seconds<**:
      The leap seconds correspond to the time required to synchronise UTC and GPS. There is currently a deviation of 18 seconds (see also default setting).
      Please note the previous explanation on **>Synchronise System Time<**.
      Manual Input
      Default setting: 18

Explanations of the three different usage data options

Fport 1 – Floating point (calculated values)			
name	**Length (bytes)**	**Function**	**Remarks**
Time Stamp	4	Unix time stamp of the measurement value (UTC) (big endian)	
Bit Mask	1	Bit 0 == true: Value for Input1 is transmitted Bit 1 == true: Value for Input2 is transmitted Bit 2 == true: Value for Input3 is transmitted Bit 3 == true: Value for Input4 is transmitted	If the input on the measurement device is configured as inactive, the bit is not set and the value is not transmitted.
Input1	4	Single Precision IEEE (big endian) Is only transmitted if the bit in the bit mask is set at the corresponding position.	With a free unit, the calculated value is transmitted directly. If the unit is predefined (e.g. m), the value is transmitted in SI base units. Special case - invalid measurement value: Byte0: 0xff Byte1: 0xff Byte2: don't care Byte3: Status (see Tab. 13 "Status Information")
Input2	4 each	See "Input1"	See "Input1"
Input3	4 each	See "Input1"	See "Input1"
Input4	4 each	See "Input1"	See "Input1"
Battery Voltage	4	Single Precision IEEE (big endian)	in Volt
System Temperature	4	Single Precision IEEE (big endian)	in °C

Tab. 10 Fport 1 – Floating point (calculated values)

Fport 2 – Floating point (calculated values and raw values)			
name	**Length (bytes)**	**Function**	**Remarks**
Time Stamp	4	Unix time stamp of the measurement value (UTC) (big endian)	
Bit Mask	1	Bit 0 == true: both values for Input1 are transmitted Bit 1 == true: both values for Input2 are transmitted	If the input on the measurement device is configured as inactive, the bit is not set and the value is not transmitted.

		Bit 2 == true: both values for Input3 are transmitted Bit 3 == true: both values for Input4 are transmitted	
Input1	4	Single Precision IEEE (big endian) Is only transmitted if the bit in the bit mask is set at the corresponding position.	With a free unit, the calculated value is transmitted directly. If the unit is predefined (e.g. m), the value is transmitted in SI base units. Special case - invalid measurement value: Byte0: 0xff Byte1: 0xff Byte2: don't care Byte3: Status (see Tab. 13 "Status Information"
Input1 Raw Value	4	Single Precision IEEE (big endian) Is only transmitted if the bit in the bit mask is set at the corresponding position.	The raw value of the input in SI unit: e.g. Voltage Input 0…10 V or Current Input 0.004…0.020 A
Input2	4 each	See "Input1"	See "Input1"
Input2 Raw Value	4 each	See "Input1 Raw Value"	See "Input1 Raw Value"
Input3	4 each	See "Input1"	See "Input1"
Input3 Raw Value	4 each	See "Input1 Raw Value"	See "Input1 Raw Value"
Input4	4 each	See "Input1"	See "Input1"
Input4 Raw Value	4 each	See "Input1 Raw Value"	See "Input1 Raw Value"
Battery Voltage	4	Single Precision IEEE (big endian)	in Volt
System Temperature	4	Single Precision IEEE (big endian)	in °C

Tab. 11 Fport 2 – Floating point (calculated values and raw values)

Fport 3 – Scaled (calculated values)			
name	**Length (bytes)**	**Function**	**Remarks**
Bit Mask	1	Bit 0 == true: Input1 valid Bit 1 == true: Input2 valid Bit 2 == true: Input3 valid Bit 3 == true: Input4 valid Bit 4 == true: Input1 signed	

		Bit 5 == true: Input2 signed Bit 6 == true: Input3 signed Bit 7 == true: Input4 signed	
Input1	2	Scaled calculated measurement value (signed or unsigned). If the corresponding bit in the bit mask is not set (invalid), the status information is transmitted at this point.	See Tab. 13 "Status Information"
Input2	2 each	See "Input1"	See "Input1"
Input3	2 each	See "Input1"	See "Input1"
Input4	2 each	See "Input1"	See "Input1"
Battery Voltage	2		in Millivolt

Tab. 12 Fport 3 – Scaled (calculated values)

Status messages/information on the previous usage data explanations

Status Code		Remarks
0	STATUS_OK	Value Ok
1	STATUS_INVALID	Invalid
2	STATUS_OVERFLOW	Out of Measurement Range (too high)
3	STATUS_UNDERFLOW	Out of Measurement Range (too low)
4	STATUS_ERROR	e.g. Communication Error HART
255	STATUS_INIT	Inactive

Tab. 13 Status Information

42.3 Modbus

The data logger can be integrated into other systems via Modbus.

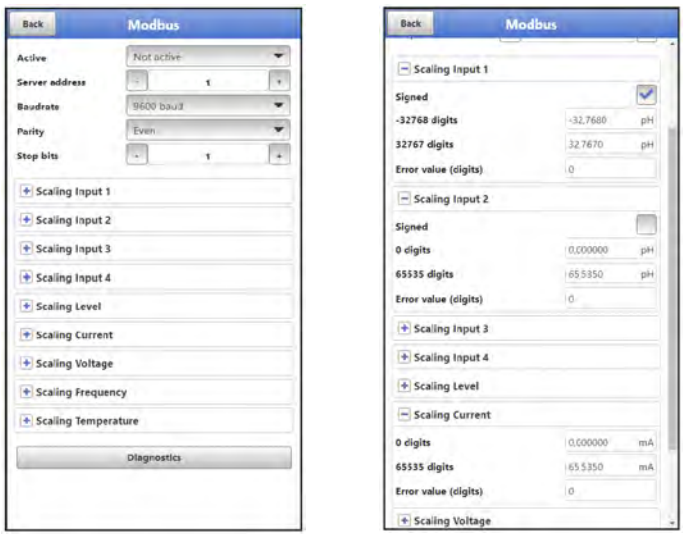

Fig. 42-11 Modbus / Scaling

The following functions are available here:

- Active (not active, Client or Server)
- Server address: specify by using the "-" / "+" keys (1 to 247)
- Baud rate (1200, 2400, 4800, 9600, 19200, 38400, 57600 or 115200 Baud)
- Parity (None, Odd or Even)
- Stop bits (1 or 2)

Furthermore, the following scalings can be set (depending on the parameter settings of inputs 1...4):

- Scaling Input 1
- Scaling Input 2
- Scaling Input 3
- Scaling Input 4
- Scaling Level
- Scaling Power
- Scaling Voltage
- Scaling Frequency
- Scaling Temperature

By entering the values for 0 / 65,535 digits (or -32,768 / 32,767 if Signed is ticked, only partly selectable), the resolution of the measuring range is set.

A value must be entered for "Error Value (digits)" (factory setting: "0") in order to communicate an error message when an error occurs.

Expert knowledge required

These settings require extensive expert knowledge and require the use of NIVUS commissioning personnel or an authorised specialist company.

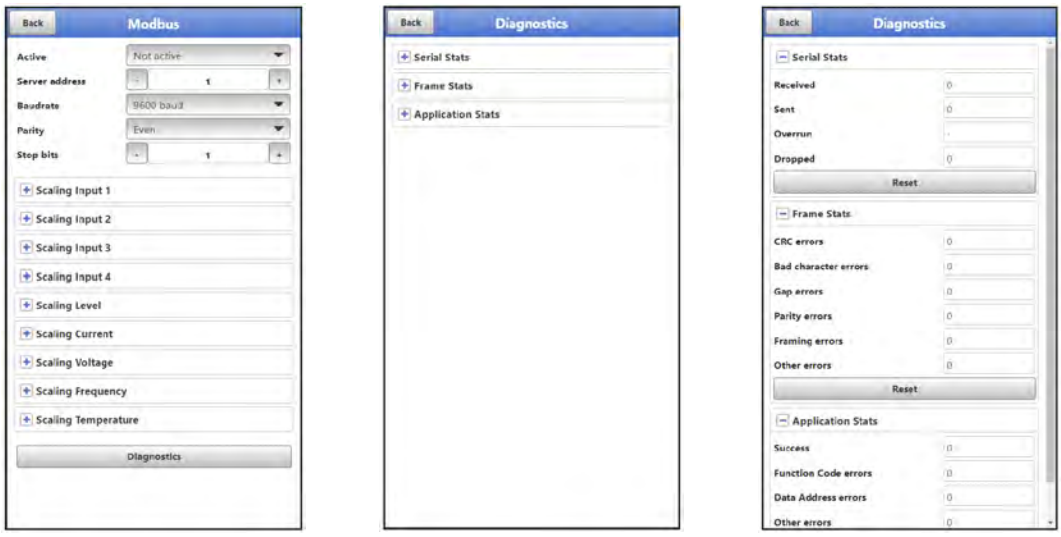

Fig. 42-12 Modbus: Scaling / Diagnostics

Under **>Diagnostics<** the statistics (Serial Stats, Frame Stats and Application Stats) are arranged in layers.

After viewing, a reset is possible in each case.

Serial Stats concern the serial interfaces and inform about the number of bytes received, sent and discarded/lost.

Frame Stats are about the communication frame and inform about error sources such as the sequence of bytes, checksums, parity, valid packets and other errors.

The **Application Stats** concern the application level and inform about functional errors such as unsuccessful transmissions, unsupported function codes, unoccupied data addresses and other errors.

42.3.1 NIVUS MODBUS TCP/RTU Application Interface for NivuLink Micro II

42.3.1.1 Introduction

Modbus TCP is used as the protocol for real-time data transmission in TCP/IP-capable data loggers by NIVUS. Please refer to the following documents for the necessary information on the protocol level:

http://www.modbus.org/docs/Modbus_Messaging_Implementation_Guide_V1_0b.pdf

http://www.modbus.org/docs/Modbus_Application_Protocol_V1_1b.pdf

42.3.1.2 Description Application Level

The addresses used in the following are so-called "PLC addresses".

Addresses referenced to 0 are used at the protocol level.

Composite measured values (IEEE754 single) are available with the least significant register (low/high) first.

The composite measured values must be read in one access.

Input Registers

Function Code(s):

- "Read Input Registers" (0x04)

Modicon-tag	Protocol Address	Number of Regis-ters	Name
30001	0	1	Calculated values (scaled) (e.g. fill level)
30002	1	1	Raw values (scaled) (e.g. current or flow)
30003	2	1	Legacy Raw Digits 12bit (e.g. 0-4095 for 4-20 mA or 0-10 V)
30004	3	2	Calculated values as IEEE754 single (SI units if ap-plicable)
30006	5	2	Raw values as IEEE754 single (SI units if applicable)

Tab. 14 Input Registers

The **other** input addresses start at the **next 10 counters** (e.g. input 2 starts at 30011).

System Registers

Function Code(s):

- „Read System Registers“ (0x04)

Modicon-tag	Protocol Address	Number of Regis-ters	Name
38201	8200	1	System voltage 1 mV / digit

Modicon-tag	Protocol Address	Number of Regis-ters	Name
38202	8201	2	System voltage as IEEE754 single (V)

Tab. 15 System Registers

42.4 HTTP

The data logger has preset access data (user name/password). Both can be changed in this menu here.

See also Chap. "37.2 Change Access Data (User Name/Password)".

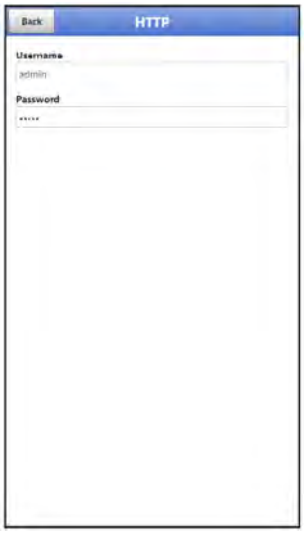

Fig. 42-13 HTTP

43 Parameter Menu Battery

This menu is different for data loggers with batteries or with rechargeable batteries.

When using **batteries**, the current voltage of the batteries (or the current voltage of the external power supply in the case of external power supply) is displayed.

When using the **rechargeable battery**, various information about the rechargeable battery (or the external power source in the case of external power supply) is displayed.

- **>Solar<**:
  Check the box when connecting a solar panel for external power supply.

For mains operation, the check mark for >Solar< must be removed.

- **>MPP Factor<** (only if checked):
  Value for tracking the Maximum Power Point. The optimum operating point (MPP) for the solar cell in relation to the current open-circuit voltage.
- **>Battery<**:
  Current values for voltage and current of the rechargeable battery.
- **>Temperature<**:
  Measured temperature in the rechargeable battery.

- **>Supply<:**
  Current input voltage of the external voltage source.
- **>MPP<**:
  Voltage of the currently determined Maximum Power Point (optimal operating point for the solar cell in relation to the current open-circuit voltage).
- **>Status<**:
  Current status of the rechargeable battery. The options are:

Error Message	Definition
NO_CHARGE	Charging deactivated (e.g. due to temperature)
TRICKLE_CHARGE	Battery voltage low; little charging current
PRE_CHARGE	Battery voltage low; little charging current
FAST_CHARGE	Normal charging current
TAPER_CHARGE	Target voltage (12.45 V) reached; charging current continuously reduced
TIMER_CHARGE	Minimum charging current undershot; charging still active for a certain time
TERMINATED_CHARGE	Charging terminated; charging only starts again after falling below the hysteresis (12.15 V)

For detailed questions please contact the NIVUS customer service (see Chap. "45.3 Customer Service Information").

See also Chap. "27.3 Connecting an external Power Supply".

Storage tips for the batteries/rechargeable batteries

By basically storing and using the batteries/rechargeable batteries at non-critical temperatures (such as room temperature) and storing them dust-free, clean and dry, their capacity can be maintained for longer.
This means that even remote data transmission can often still work well at values in the lower capacity range.

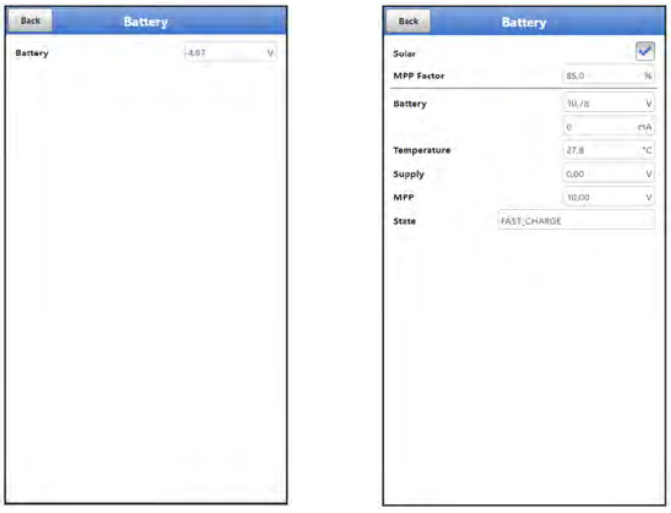

Fig. 43-1 Battery menu when using batteries / rechargeable battery

44 Parameterisation Menu – Alarm (only in connection with menu Data Transmission)

The >Alarm< parameter menu is divided into up to six sub-items. These sub-items are >Battery<, >Temperature<, >Input 1<, >Input 2<, >Input 3< and >Input 4<.

The individual sub-items are only visible if the inputs and the digital output have previously been assigned a type under >Application< and thus activated (see Chap. "39.2 Menu Inputs" and "39.3 Menu Digital Output").

For details beyond these operating instructions, on alarm management, alarm messages, alarm overview, status information etc. see also the NIVUS WebPortal manual.

44.1 Menu >Alarm< / >Battery (12V)<

Fig. 44-1 Alarming Battery

For the >Battery (12V)< sub-item, up to five different threshold values can be entered using the "+" and "-" keys for **>Lower Thresholds Entries<**. When these are reached, an alarm e-mail (only in connection with the NIVUS WebPortal) is to be issued.

The threshold values are defined by clicking on the fields and typing in numerical values. The data logger sorts the entered threshold values in descending order. This is done independently of the input sequence.

By specifying **>Hysteresis (abs.)<** and **>Hysteresis (rel.)<**, the alarm transmission can be stabilised. To prevent constant status changes due to the smallest fluctuations, the hysteresis function sets a "control threshold" above or below the actual threshold value at a defined absolute or relative distance. Only when this is exceeded or fallen short of, the new change of state is accepted and an alarm transmission (Alarm active/inactive) is triggered.

Default Settings:
Hysteresis (abs.): 0.10 V
Hysteresis (rel.): 5.0 %

44.2 Menu >Alarm< / >Temperature<

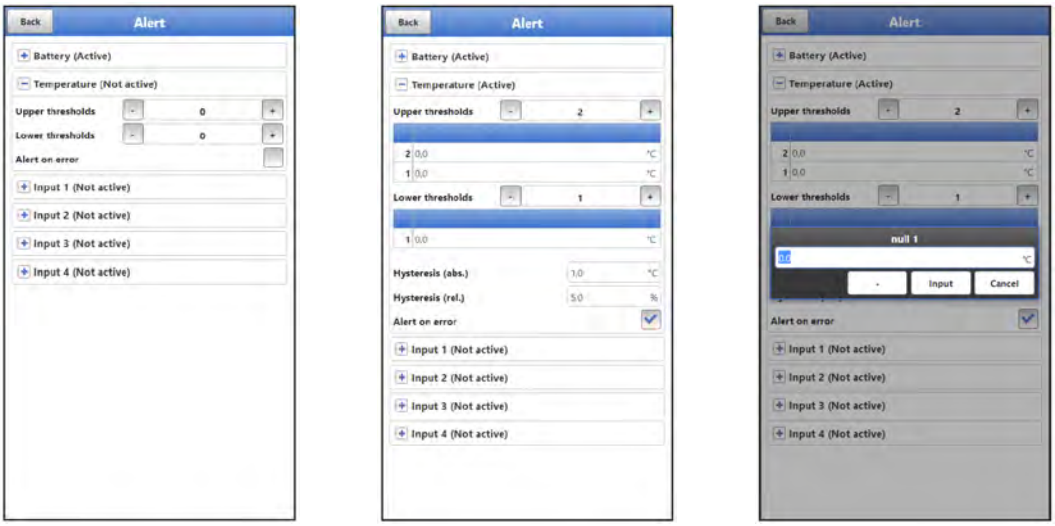

Fig. 44-2 Alarming Temperature

For the >Temperature< sub-item, up to five different threshold values can be entered using the "+" and "-" keys for **>Upper Thresholds Entries<** and for **>Lower Thresholds Entries<**. When these are reached, an alarm e-mail (only in connection with the NIVUS WebPortal) is to be issued.

The threshold values are defined by clicking on the fields and typing in numerical values. The data logger sorts the entered threshold values in descending order. This is done independently of the input sequence.

By specifying **>Hysteresis (abs.)<** and **>Hysteresis (rel.)<**, the alarm transmission can be stabilised. To prevent constant status changes due to the smallest fluctuations, the hysteresis function sets a "control threshold" above or below the actual threshold value at a defined absolute or relative distance. Only when this is exceeded or fallen short of, the new change of state is accepted and an alarm transmission (Alarm active/inactive) is triggered.

Default Settings:
Hysteresis (abs.): 1.0 °C
Hysteresis (rel.): 5.0 %

In addition, the checkbox **>Alert on Error<** can be set. Then an alarm e-mail (only in connection with the NIVUS WebPortal) is sent in the event of a malfunction of the integrated temperature sensor. Such errors are e.g. cable faults, interruptions, short circuits etc.

44.3 Menu >Alarm< / >Input x<

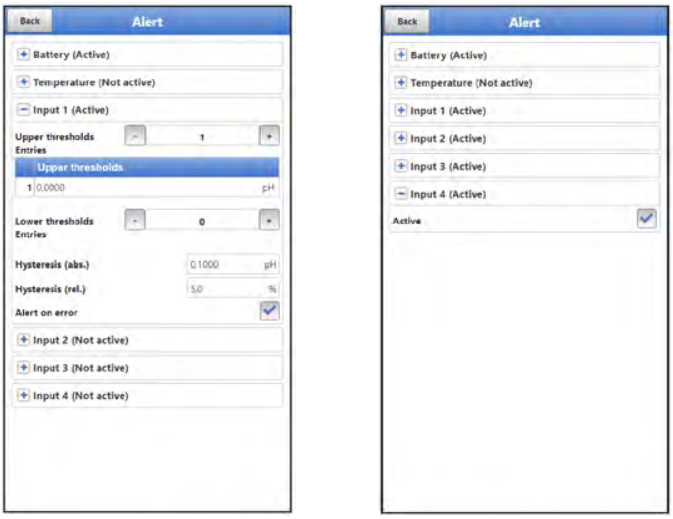

Fig. 44-3 Alarming input x / with parameterisation "Digital Input"

For the >Input 1<, >Input 2<, >Input 3< and >Input 4< sub-items, up to five different threshold values can be entered using the "+" and "-" keys for **>Upper Thresholds Entries<** and for **>Lower Thresholds Entries<** depending on the parameter settings. When these are reached, an alarm e-mail (only in connection with the NIVUS WebPortal) is to be issued.

The threshold values are defined by clicking on the fields and typing in numerical values. The data logger sorts the entered threshold values in descending order. This is done independently of the input sequence.

If the **inputs** are parameterised **as "Digital Input"**, they can be activated. This is done by checking the box. Threshold values cannot be parameterised and no other settings are possible.

By specifying **>Hysteresis (abs.)<** and **>Hysteresis (rel.)<**, the alarm transmission can be stabilised. To prevent constant status changes due to the smallest fluctuations, the hysteresis function sets a "control threshold" above or below the actual threshold value at a defined absolute or relative distance. Only when this is exceeded or fallen short of, the new change of state is accepted and an alarm transmission (Alarm active/inactive) is triggered.

Default Settings:
Hysteresis (abs.): depending on the selected type / parameterisation
Hysteresis (rel.): 5.0 %

In addition, the checkbox **>Alert on Error<** can be set. Then an alarm e-mail (only in connection with the NIVUS WebPortal) is sent in the event of an active pending error. Such errors are e.g. cable faults, interruptions, short circuits etc.

Maintenance and Cleaning

WARNING ***Disconnect the System from Mains Power***

Disconnect the unit from the mains (if connected) and secure the higher system against being switched on again before starting maintenance, cleaning and/or repair work (only by qualified personnel).

Disregarding may lead to electric shock.

WARNING ***Check danger due to explosive gases***

Before starting assembly, installation and maintenance work, be sure to check that all regulations on safety at work have been observed and that there is no possible risk of explosive gases. Use a gas warner for the check.

When working in the sewer system, make sure that no electrostatic charge can occur:

- *Avoid unnecessary movements to reduce the building-up of static charges.*
- *Discharge any static electricity present on your body before you start installing the sensor.*

Disregarding may result in personal injury or damage to the system.

WARNING ***Open the device only out of Ex areas***

Do not open, service or repair in an area where an explosive atmosphere is present.

WARNING ***Germ Contamination***

Due to the frequent use of the sensors in the waste water sector, parts can be contaminated with dangerous germs. Therefore, appropriate precautions must be taken when coming into contact with cables and sensors.

Wear protective clothing.

45 Maintenance

45.1 Maintenance Interval

The type NivuLink Micro II / NivuLink Micro II Ex data logger is conceived as a low-maintenance and low-wear instrument.

Nevertheless, NIVUS recommend an **annual check** of the entire measuring system by the NIVUS customer service.

Depending on the area of application of the measuring system, the maintenance interval may vary. The scope of maintenance and its intervals depend on the following factors:

- Measurement principle of the sensors
- Material wear
- Measurement medium and channel hydraulics
- General regulations for the operator of the measurement system
- Environmental conditions

In addition to the annual maintenance, NIVUS recommend a complete maintenance of the measuring system by the NIVUS customer service after **ten years at the latest**.

Generally, the verification of data loggers and sensors is a basic measure in order to improve operational reliability and to increase the lifetime.

Contact the NIVUS customer service to make an appointment (see Chap. "45.3 Customer Service Information").

45.2 Maintenance Tasks

45.2.1 Clean, check and replace Seals

Basic Maintenance for all Types

The enclosure gaskets of the data logger must be maintained/checked (at least) **every time** the enclosure flap is **closed**:

- Remove foreign bodies and dirt.
- Check elasticity.
- Check for damage.
- Ensure correct fit.
- Treat the seals with silicone grease if necessary.
- Replace defective seals (by NIVUS customer service).

For correct replacement of the seals, NIVUS recommend to return the data logger to NIVUS.

Contact the NIVUS customer service to make an appointment (see Chap. "45.3 Customer Service Information").

Be sure to check the seals regularly

Non-compliance may have negative consequences in terms of warranty and liability. See Chap. "6 Warranty" and "7 Disclaimer".

45.2.2 Replacing Batteries

The batteries for the data loggers must not be older than **ten years**. The approved batteries are marked by the battery manufacturer with an indication of the date of manufacture. It must be ensured that the batteries are removed in good time to avoid deep discharge.

⇨ Approved batteries and procedure to replace the batteries see Chap. "48.1 Battery Replacement".

The following applies to the batteries used:

- *All batteries used in a device must be marked with a uniform date by the manufacturer and must be new.*
- *The replacement of individual batteries is not permitted.*
- *Strict attention must be paid to the correct orientation of the batteries when inserting them.*
- *All batteries must bear the ®UL mark.*

45.2.3 Recharging / Replacing the rechargeable Battery

If the rechargeable battery in the data logger can no longer hold sufficient current, it must be replaced with a new one.

During operation, the data logger goes into power-down mode when the voltage falls below 8.7 V to avoid possible damage to the battery. As a minimum current is drawn even in power-down mode and deep discharge should be avoided, either the battery must be charged with the NIVUS charger as soon as possible or the external supply must be restored.

⇨ Approved rechargeable batteries and procedure to replace the rechargeable batteries see Chap. "48.2 Rechargeable Battery Replacement".

➲ **Recharge** using the NIVUS charger *NLG02 ZLAD:*

1. To remove the battery, proceed as described in Chapter "48.2 Rechargeable Battery Replacement" (Working steps 1...3).
2. Plug the battery connector into the charger.
3. Connect the mains plug of the charger to the mains.
   The LED lights up red during the charging process. When the battery is fully charged, the LED lights up green.
4. When charging is complete, disconnect the mains plug.
5. Disconnect the battery plug from the charger.
6. Reinstall the battery as described in Chapter "48.2 Rechargeable Battery Replacement" (working steps 4...7).

45.3 Customer Service Information

For maintenance measures to be carried out by NIVUS, the recommended annual inspection of the entire measuring system or complete maintenance after ten years at the latest, contact our customer service:

NIVUS GmbH – Customer Service

Phone +49 7262 9191-922

customercenter@nivus.com

⇨ Observe Chap. "16 Return" prior to returning the data logger to NIVUS GmbH.

46 Cleaning

46.1 Data Logger

WARNING ***Disconnect the System from Mains Power***

Make sure that the device is disconnected from mains power.

Disregarding may lead to electric shock.

DANGER ***Danger by electrostatic Discharge***

Clean the device only with a damp cloth.

In case of disregard, the explosion protection of the device is no longer given due to possible static charge.

The device then poses a danger to the life of the user and can cause the ignition of an explosive atmosphere.

The NivuLink Micro II enclosure complies with protection class IP68 when closed and is not very sensitive. Nevertheless, a high-pressure cleaner should **not** be used for cleaning.

Also, do **not** use harsh cleaning agents or solvents. Instead, it is better to use mild household cleaners or soap suds.

46.2 Transducers

Be sure to follow the instructions for maintenance and cleaning of the sensors. These instructions can be found in the respective technical description or instruction manual.

These manuals are provided with the respective sensors and/or are available as download on the NIVUS homepage.

47 Dismantling/Disposal

Improper disposal may be harmful to the environment.

➲ Dispose of device components and packaging materials in accordance with the applicable local environmental regulations for electrical products:

1. Disconnect the device from mains power, if connected.
2. Remove connected cables from the device.
3. Remove batteries and, if they are defective, dispose of them properly.

⇨ To open the enclosure or remove the batteries / rechargeable battery, see also Chap. "48.1 Battery Replacement" or "48.2 Rechargeable Battery Replacement".

4. Dispose of the data logger properly.

EU WEEE Directive

This symbol indicates that the requirements of Directive 2012/19/EU on waste electrical and electronic equipment must be observed when disposing of the device. NIVUS GmbH support and promote the recycling or environmentally sound, separate collection/disposal of waste electrical and electronic equipment to protect the environments and human health. Observe the local laws and regulations on disposal.

NIVUS GmbH is registered with the EAR, therefore public collection and return points in Germany can be used for disposal.

48 Installation of Spare Parts and Wearing Parts

We expressly draw your attention to the fact that spare parts and accessories which have not been supplied by us have also not been tested and approved by us. The installation and/or use of such products may therefore negatively alter or invalidate the design properties of your measurement system.

NIVUS are not liable for damage caused by the use of non-original parts and non-original accessories.

48.1 Battery Replacement

The batteries for the data logger are **not** rechargeable.

New batteries can be purchased from NIVUS.

Approved Batteries

The following battery types are currently approved:

- For **Ex Devices**:
  SAFT LSH 20; Li-$SOCl_2$; 3.6 V; Type D
  ULTRALIFE UHR-ER 34615-X; Li-$SOCl_2$; 3.6 V; Type D

- For **Non-Ex Devices**:
  SAFT LSH 20; Li-$SOCl_2$; 3.6 V; Type D
  ULTRALIFE UHR-ER 34615-H; Li-$SOCl_2$; 3.6 V; Type D
  ULTRALIFE UHR-ER 34615-X; Li-$SOCl_2$; 3.6 V; Type D

The batteries can be purchased from a supplier other than NIVUS, too. If applicable, ensure that the traceability of the batteries can be guaranteed by this supplier.

However, only battery types approved in writing by NIVUS are permitted.

In the future, other battery types may be approved.

For more questions contact the NIVUS customer service (see Chap. "45.3 Customer Service Information").

Replacement only by qualified personnel

The batteries may only be inserted or replaced by trained personnel.

Replace all three batteries at the same time

All batteries used must be replaced at the same time. The replacement of individual batteries is not permitted.

Replacing the used Batteries

➲ Procedure:

1. Open the enclosure flap according to Chap. "23 Open / Close the Data Logger Enclosure".
2. Loosen the eyelet strap (Fig. 48-1 Pos. 1) to secure the batteries at the top and, if necessary, unthread it to remove the batteries (Fig. 48-1 Pos. 2).
3. Insert new batteries (installation position +/- according to the print on the battery holder board) and secure each again with the eyelet strap (thread in and fasten again at the top).
4. Close the enclosure flap.

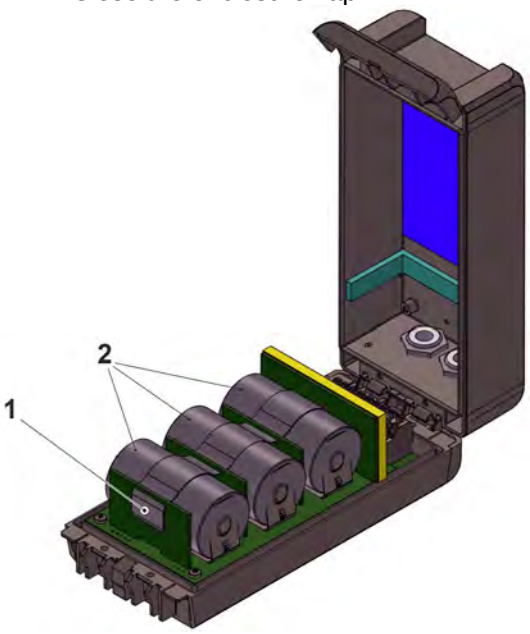

Fig. 48-1 Battery replacement (here: in enclosure S - special design)

48.2 Rechargeable Battery Replacement

The rechargeable batteries *NLG02 ZUB AP* for the data logger can be recharged with the charger *NLG02 ZLAD*.

New rechargeable batteries can be purchased from NIVUS.

Approved Rechargeable Batteries

Only the *NLG02 ZUB AP* rechargeable battery by NIVUS is currently approved.

For more questions contact the NIVUS customer service (see Chap. "45.3 Customer Service Information").

Replacement only by qualified personnel

The rechargeable battery may only be inserted or replaced by trained personnel.

Replacing the rechargeable Battery

➲ Procedure:

1. Open the enclosure flap according to Chap. "23 Open / Close the Data Logger Enclosure".

2. Disconnect the rechargeable battery plug (Fig. 48-2 Pos. 1).
3. Loosen the Velcro strap (not shown) for securing the battery and remove the battery (Fig. 48-1 Pos. 3).
4. Insert the new battery between the separating wall (Fig. 48-1 Pos. 2) and the plastic plug (Fig. 48-1 Pos. 4) (this serves to secure the battery against slipping).
5. Secure the battery again with the Velcro strap.
6. Reconnect the battery plug.
7. Close the enclosure flap.

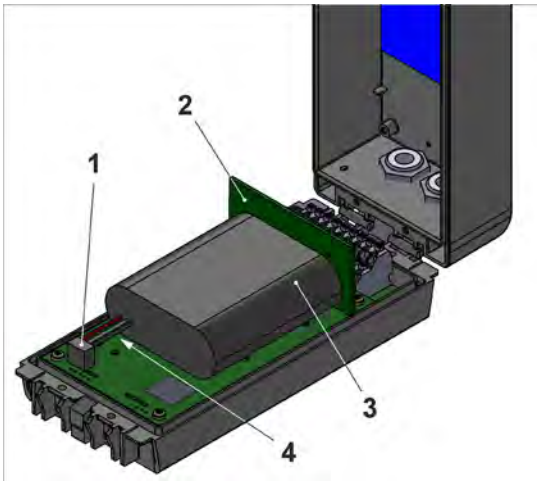

Fig. 48-2 Rechargeable Battery Replacement (here: in enclosure S - special design)

49 Accessories

Article No	Description
ZMS0 176	Mounting plate for screwing on/off the data logger (incl. fastening material)
E-KVZ-VERSCHL B9	Sealing plug/locking bolt, diameter 9 mm, length 30 mm
NLG02 ZSE HALT	Suspension bracket for fastening on a step iron
NLG02 ZUB BP	Battery pack (3 pcs.) for use in ATEX-Zone 1
NLG02 ZUB NE	Battery pack (3 pcs.) for use in non-Ex areas
NLG02 ZUB AP	Rechargeable battery (1 pc.) for use in non-Ex areas
NLG02 ZLAD	Battery charger for the *NLG02 ZUB AP* rechargeable battery
NLG0 USB KAB1	USB Cable
Upon request	Industrial USB Isolator (e.g. Type FIT0860)
NLG0 SCRDR TX20	Angled Torx key
ZUB0 NFM MAGNET	Ring magnet, mounted
NLF0 ANTENNE	Rod antenna 2G/3G/74G, bendable, SMA plug
NLG02 S NETZ 12V	Power adapter for NivuLink Micro II (non-Ex), 12 V / 2 A, input voltage: 85...264 V AC
NLG02 H NETZ 12V	DIN rail power adapter for NivuLink Micro II (non-Ex), 12 V / 2 A, input voltage: 85...264 V AC
ZUB0 KAB RM NLG	Connection cable between NLG data logger and rain gauge (one side with plug, other side with open cable ends)

NLG00 TOOL SET	Tool set, including: 1x USB-Micro data cable 3 m 1x Slot screwdriver 1x Torx screwdriver
NLG02 ZUB SK	Protective cage
E-ZMS-NLM WSD	Weather protection roof for UV protection for the Ex data logger
	NIVUS WebPortal: Data management system for storage and provision of measurement data. Multiple options for direct measurement data analysis, system verification, data forwarding and alarming, right up to complete log generation through processing in the cloud. For details, please contact your sales representative.
	NIVUS DataKiosk / Data Kiosk Client: NIVUS DataKiosk is a web-based connectivity platform for the secure provision of measurement and process data to upstream or downstream systems such as a process control system. Due to its open architecture, NIVUS DataKiosk connects IoT solutions with a wide variety of IT systems and makes necessary data format adaptations. DataKiosk fulfils the function of a gateway. It enables application programmes to read data from a wide variety of devices and pass on control signals to devices on the basis of standardised internet technologies. Through comprehensive networking and automation, processes can be improved overall and their utility can be increased. The NIVUS DataKiosk Client is a graphical interface that retrieves the data from the DataKiosk and automatically stores the result in a configurable location. For details, please contact your sales representative.

Tab. 16 Spare Parts and Accessories

More accessories and spare parts can be found in the current NIVUS price list.

Index

A

Access Data
Password 68
User Name 68
Accessories 125
Alarm 116
Approvals 130
Ex Zone 1 34

B

Batteries, approved
for Ex Device 123
for Non-Ex Device 123
Buffer Capacitor 90

C

Certificates 130
Cleaning 122
Codes 129
Colour Code
Wires 12
Connectable Probes 32
Connectable Sensors 32
Connection Data
Ex Device 33
Copyright 3
Copyrights 3
Credits 129
Customer Centre 121

D

Device ID 32
Device Versions 35
Disclaimer 19

E

Enclosure 34
Error Messages 91

G

Germs 18, 119

H

Humidity 34

I

Inspection upon Receipt 24
Installation 38
Intended Use 20

L

Licences 129
Licensing Issues 129
LoRaWAN 105

M

Maintenance Interval 119
Measurement Principles 33

N

Nameplates 32
Names 3

O

Operation Temperature 34
Operator's Duties 22
Original Instruction Manual 3
Overview 26

P

Power Supply 33
Powerdown 92
Precautions 18
Probes, connectable 32
Product Construction 26
Property Rights 3
Protection 34, 39, 122

Q

Qualified Personnel 23

R

Rechargeable Battery, approved 124
Recharging the Battery
Battery Charger NLG02 ZLAD 121
Repeated measurement of the same measurement places 68, 69
Replacing the rechargeable Battery 121
Restart 92
Return 25

S

Safety Measures 18
Scope of Delivery 24
Sensor Types 51
Sensors, connectable 32
Service Level 92
Spare Parts 123
Specifications 33
Storage 24
Storage Temperature 34

System Time 90

T

Translation.....3
Transport 25

W

Wake-Up
  Windows 61
Warranty.....19
Wearing Parts.....123
Wires
  Colour Code.....12

Open Source Software

50 List of Sources of the Licences and Codes used

The data logger type NivuLink Micro II / NivuLink Micro II Ex uses code from the following open source projects:

- Freetype (http://www.freetype.org)
- Libharu (http://libharu.org)
- Libjpeg (http://www.ijg.org)
- Libpng (http://www.libpng.org)
- Zlib (http://www.zlib.net)
- Mini-XML (http://www.msweet.org)
- Nano-X/nxlib (http://www.microwindows.org)
- FLTK (http://www.fltk.org)
- Appendix1: LGPL
- Appendix2: MPL

Licensing Issues

For questions on licensing contact opensource@nivus.com

Approvals and Certificates

DE / EN / FR

EU Konformitätserklärung

EU Declaration of Conformity

Déclaration de conformité UE

NIVUS GmbH
Im Täle 2
75031 Eppingen

Telefon: +49 07262 9191-0
Telefax: +49 07262 9191-999
E-Mail: info@nivus.com
Internet: www.nivus.de

Für das folgend bezeichnete Erzeugnis:

For the following product:

Le produit désigné ci-dessous

Bezeichnung:	**Autarker Datenlogger NivuLink Micro II**
Description:	*Self-sufficient Data Logger NivuLink Micro II*
Désignation:	*Enregistreur de données autonome NivuLink Micro II*
Typ / Type:	**NLG02**

erklären wir in alleiniger Verantwortung, dass die auf dem Unionsmarkt ab dem Zeitpunkt der Unterzeichnung bereitgestellten Geräte die folgenden einschlägigen Harmonisierungsvorschriften der Union erfüllen:

we declare under our sole responsibility that the equipment made available on the Union market as of the date of signature of this document meets the standards of the following applicable Union harmonisation legislation:

nous déclarons, sous notre seule responsabilité, à la date de la présente signature, la conformité du produit pour le marché de l'Union, aux directives d'harmonisation de la législation au sein de l'Union:

- 2014/53/EU
- 2011/65/EU

Bei der Bewertung wurden folgende einschlägige harmonisierte Normen zugrunde gelegt bzw. wird die Konformität erklärt in Bezug auf die nachfolgend genannten anderen technischen Spezifikationen:

The evaluation assessed the following applicable harmonised standards or the conformity is declared in relation to other technical specifications listed below:

L'évaluation est effectuée à partir des normes harmonisées applicable ou la conformité est déclarée en relation aux autres spécifications techniques désignées ci-dessous:

- EN 61010-1:2010 + A1:2019 + A1:2019/AC:2019
- EN 61326-1:2013
- Draft ETSI EN 301 489-19 V2.2.0
- EN 301 511 V12.5.1 (GSM/2G)
- EN 301 908-2 V13.1.1 (UMTS/3G)
- Final draft ETSI EN 303 413 V1.2.1 (GNSS)
- EN 62311:2008
- EN 301 489-1 V2.2.3
- Draft ETSI EN 301 489-52 V1.1.2
- EN 301 908-1 V15.2.0 (UMTS/3G, LTE/4G)
- EN 301 908-13 V13.2.1 (LTE/4G)

Diese Erklärung wird verantwortlich für den Hersteller:

This declaration is submitted on behalf of the manufacturer:

Le fabricant assume la responsabilité de cette déclaration:

NIVUS GmbH
Im Taele 2
75031 Eppingen
Germany

abgegeben durch / *represented by / faite par:*
Marcus Fischer (Geschäftsführer / *Managing Director / Directeur général)*

Eppingen, den 15.08.2023

Gez. *Marcus Fischer*

DE / EN / FR

EU Konformitätserklärung

EU Declaration of Conformity

Déclaration de conformité UE

NIVUS GmbH
Im Täle 2
75031 Eppingen

Telefon: +49 07262 9191-0
Telefax: +49 07262 9191-999
E-Mail: info@nivus.com
Internet: www.nivus.de

Für das folgend bezeichnete Erzeugnis:

For the following product:

Le produit désigné ci-dessous:

Bezeichnung:	**"Ex" Autarker Datenlogger NivuLink Micro II**
Description:	*"Ex" Self-sufficient Data Logger NivuLink Micro II*
Désignation:	*"Ex" Enregistreur de données autonome NivuLink Micro II*
Typ / Type:	**NLG02 xxxxExx**

erklären wir in alleiniger Verantwortung, dass die auf dem Unionsmarkt ab dem Zeitpunkt der Unterzeichnung bereitgestellten Geräte die folgenden einschlägigen Harmonisierungsvorschriften der Union erfüllen:

we declare under our sole responsibility that the equipment made available on the Union market as of the date of signature of this document meets the standards of the following applicable Union harmonisation legislation:

nous déclarons, sous notre seule responsabilité, à la date de la présente signature, la conformité du produit pour le marché de l'Union, aux directives d'harmonisation de la législation au sein de l'Union:

- 2014/34/EU
- 2014/53/EU
- 2011/65/EU

Bei der Bewertung wurden folgende einschlägige harmonisierte Normen zugrunde gelegt bzw. wird die Konformität erklärt in Bezug auf die nachfolgend genannten anderen technischen Spezifikationen:

The evaluation assessed the following applicable harmonised standards or the conformity is declared in relation to other technical specifications listed below:

L'évaluation est effectuée à partir des normes harmonisées applicable ou la conformité est déclarée en relation aux autres spécifications techniques désignées ci-dessous:

- EN 61010-1:2010 + A1:2019 + A1:2019/AC:2019
- EN 61326-1:2013
- Draft ETSI EN 301 489-19 V2.2.0
- EN 301 511 V12.5.1 (GSM/2G)
- EN 301 908-2 V13.1.1 (UMTS/3G)
- EN IEC 60079-0:2018 + AC:2020-02
- EN 60079-11:2012
- EN 62311:2008
- EN 301 489-1 V2.2.3
- Draft ETSI EN 301 489-52 V1.1.2
- EN 301 908-1 V15.2.0 (UMTS/3G, LTE/4G)
- EN 301 908-13 V13.2.1 (LTE/4G)
- EN IEC 60079-7:2015 + A1:2018
- EN 60079-18:2015 + A1:2017

Ex-Kennzeichnung / *Ex-designation / Marquage Ex* : ⟨Ex⟩ II 2G Ex eb ib [ib] mb IIB T4 Gb

EU-Baumusterprüfbescheinigung / *EU-Type Examination Certificate / Attestation d'examen «UE» de type:*

TÜV 22 ATEX 314574 X issue: 00

Notifizierte Stelle (Kennnummer) / *Notified Body (Identif. No.) / Organisme notifié (№ d'identification)*

TÜV NORD CERT GmbH, Am TÜV 1, 45307 Essen, Germany (0044)

Diese Erklärung wird verantwortlich für den Hersteller:
This declaration is submitted on behalf of the manufacturer:
Le fabricant assume la responsabilité de cette déclaration:

NIVUS GmbH
Im Taele 2
75031 Eppingen
Germany

abgegeben durch / *represented by / faite par:*

Markus Fischer (Geschäftsführer / *Managing Director / Directeur général)*

Eppingen, den 22.02.2024

Gez. *Marcus Fischer*

Translation

(1) **EU-Type Examination Certificate**

(2) Equipment and protective systems intended for use in potentially explosive atmospheres, **Directive 2014/34/EU**

(3) **Certificate Number** **TÜV 22 ATEX 314574 X** **Issue:** 00

(4) for the product: Data logger NivuLink Micro II type NLG02xxxxExx

(5) of the manufacturer: **NIVUS GmbH**

(6) Address: Im Täle 2
75031 Eppingen
Germany

Order number: 8003041150
Date of issue: See date of signature

(7) The design of this product and any acceptable variation thereto are specified in the schedule to this EU-Type Examination Certificate and the documents therein referred to.

(8) The TÜV NORD CERT GmbH, Notified Body No. 0044, in accordance with Article 17 of the Directive 2014/34/EU of the European Parliament and the Council of 26 February 2014, certifies that this product has been found to comply with the Essential Health and Safety Requirements relating to the design and construction of products intended for use in potentially explosive atmospheres given in Annex II to the Directive. The examination and test results are recorded in the confidential ATEX Assessment Report No. 22 203 314574.

(9) Compliance with the Essential Health and Safety Requirements has been assured by compliance with:
EN IEC 60079-0:2018/AC:2020-02 **EN IEC 60079-7:2015/A1:2018**
EN 60079-11:2012 **EN 60079-18:2015/A1:2017**
except in respect of those requirements listed at item 18 of the schedule.

(10) If the sign "X" is placed after the certificate number, it indicates that the product is subject to the Specific Conditions for Use specified in the schedule to this certificate.

(11) This EU-Type Examination Certificate relates only to the design, and construction of the specified product. Further requirements of the Directive apply to the manufacturing process and supply of this equipment. These are not covered by this certificate.

(12) The marking of the product shall include the following:

II 2 G Ex eb ib [ib] mb IIB T4 Gb

TÜV NORD CERT GmbH, Am TÜV 1, 45307 Essen, notified by the central office of the countries for safety engineering (ZLS), Ident. Nr. 0044, legal successor of the TÜV NORD CERT GmbH & Co. KG Ident. Nr. 0032

The deputy head of the notified body

TÜVNORD Digital unterschrieben von Meyer Andreas Datum: 2023.10.04 15:15:41 +02'00'

Hanover office, Am TÜV 1, 30519 Hannover, Tel. +49 511 998-61455, Fax +49 511 998-61590

This certificate may only be reproduced without any change, schedule included.
Excerpts or changes shall be allowed by the TÜV NORD CERT GmbH

TÜV NORD Certification

(13) **SCHEDULE**

(14) **EU-Type Examination Certificate No. TÜV 22 ATEX 314574 X** **Issue 00**

(15) **Description of product:**
The data logger NivuLink Micro II type NLG02xxxxExx is a stand-alone data logger with gateway function. It is suitable for the transmission of measurement data to a web portal or process control system.
The wireless data transmission is via an integrated 4G LTE GPRS modem with GPS functionality. Optionally, the possibility of a LoRa data transmission also exists.

Type code:
NLG02 x x x x x xx

Number of inputs:
1: 1 input
4: 4 inputs
Data transmission:
G: LTE
L: LoRa
Power supply:
B: Battery
O: without Battery
R: Battery pack
Enclosure:
S: Enclosure standard version Bopla plastic PC with plastic LED screw (Not for Ex-uses).
A: Data logger aluminium enclosure from Bopla (round seal) without LED screw made of stainless steel.
L: Data logger Aluminium enclosure from Bopla (round seal) with stainless steel LED screw.
K: Data logger POM-C plastic enclosure (round seal) with M5 hole at RGB LED position (filled with epoxy resin)
E: Ex version for use in Ex zone 1
0: No Ex device
Options:
hardware or software options

This certificate may only be reproduced without any change, schedule included.
Excerpts or changes shall be allowed by the TÜV NORD CERT GmbH

TÜV NORD Certification

Schedule to EU-Type Examination Certificate No. TÜV 22 ATEX 314574 X **Issue 00**

Electrical data:

Power supply (Internal primary cells)	In type of protection increased safety Ex eb IIB U_n = 10.8 V d.c. Powered via 3 x 3.6 V / 13 Ah LSH20-batteries or 3 x 3.6 V / 14.5 Ah UHR-ER34615-X-batteries
Alternative external Supply (Terminal X3)	In type of protection intrinsic safety Ex ib IIB Only for connection to certified intrinsically safe circuits. Maximum values: U_i = 11.7 V I_i = 1.25 A P_i = 14.6 W The effective internal capacitances and inductances are negligibly small.
Relay output (Terminals X1.1(NO); X1.10(NC); X.1.2(COM))	In type of protection intrinsic safety Ex ib IIB. Only for connection to certified intrinsically safe circuits. Maximum values: U_i = 26 V I_i = 100 mA P_i = 2.6 W The effective internal capacitances and inductances are negligibly small.
RS-485 Interface output (Terminals X1.3(RxTx+); X1.11(GND); X1.12(RxTx-))	In type of protection intrinsic safety Ex ib IIB with following maximum values: U_o = 5.88 V I_o = 150.1 mA P_o = 221.9 mW Characteristic line: Linear The effective internal capacitances and inductances are negligibly small.

The maximum permissible values for the external inductance L_o and the external capacitance C_o can be taken from the following table:

Ex ib IIB	L_o [mH]	14	5	0.5	0.1	0.002
	C_o [µF]	7.3	12	23	39	1000

RS-485 Interface input (Terminals X1.3(RxTx+); X1.11(GND); X1.12(RxTx-))	In type of protection intrinsic safety Ex ib IIB. Only for connection to certified intrinsically safe circuits. Maximum values: U_i = 7.21 V I_i = 176 mA P_i = 317.24 mW The effective internal capacitances and inductances are negligibly small.

This certificate may only be reproduced without any change, schedule included.
Excerpts or changes shall be allowed by the TÜV NORD CERT GmbH

TÜV NORD Certification

Schedule to EU-Type Examination Certificate No. TÜV 22 ATEX 314574 X **Issue 00**

Universal input
1: (X1.4(PWR CH1); X1.5(INP CH1); X1.6(GND))
2: (X1.7(PWR CH2); X1.8(INP CH2); X1.9(GND))
3: (X1.13(PWR CH3); X1.14(INP CH3); X1.15(GND))
4: (X1.16(PWR CH4); X1.17(INP CH4); X1.18(GND))

In type of protection intrinsic safety Ex ib IIB with following maximum values per universal input:

U_o = 25.09 V
I_o = 90.9 mA
P_o = 570 mW
Characteristic line: Linear
The effective internal capacitances and inductances are negligibly small.

The maximum permissible values for the external inductance L_o and the external capacitance C_o can be taken from the following table:

Ex ib IIB	L_o [mH]	26	2	1	0.5	0.2
	C_o [µF]	0.52	0.53	0.61	0.72	0.83

The USB interface circuit (X11), the antenna circuit BU1 with GPRS and LoRa module and the SIM-card slot circuit (X14) are in type of protection intrinsic safety Ex ib IIB.
The maximum permissible connectable reactances for the SIM card:
Capacitance C_o = 200 µF
Inductance L_o = negligibly small.

The different intrinsically safe circuits and the power supply via internal primary cells are galvanically connected to each other.

Thermal data:
Permissible ambient temperature range during operation: -20 °C ≤ Ta ≤ +50 °C

(16) Drawings and documents are listed in the ATEX Assessment Report No. 22 203 314574

This certificate may only be reproduced without any change, schedule included.
Excerpts or changes shall be allowed by the TÜV NORD CERT GmbH

TÜV NORD Certification

Schedule to EU-Type Examination Certificate No. TÜV 22 ATEX 314574 X Issue 00

(17) **Specific Conditions for Use:**

1. The data logger NivuLink Micro II type NLG02xxxxExx has to be installed and used in such a way that electrostatic charging from operation, maintenance, and cleaning is excluded.
2. If the data logger NivuLink Micro II type NLG02xxxLExx and the data logger NivuLink Micro II type NLG02xxxKExx are installed in hazardous area, they have to be protected from UV radiation.
3. The connecting and disconnecting of the "SIM card" is only permitted if no explosive atmosphere exists.
   The connection to the "USB socket" is only permitted outside the potentially explosive atmosphere.
4. Change of the supply batteries is only permitted outside of the explosion hazardous area.
5. Only permissible cells according to the manufacturer`s operating instructions are allowed to be used.
6. The data logger NivuLink Micro II type NLG02xxxLExx and the data logger NivuLink Micro II type NLG02xxxAExx have to be installed in such a way that a mechanical hazard can be excluded.
7. For reading out the measured values, an industrial USB Isolator (e.g. type FIT0860) with 1500 V isolation voltage is provided between the USB interface of the device (laptop/PC,..) connected to the datalogger and the USB socket of the data logger.
   The power supply of the connected device (laptop/PC,...) is to be connected to a power supply unit with SELV/PELV protective extra-low voltage.
   A battery-powered laptop/PC is considered as SELV/PELV device.

(18) **Essential Health and Safety Requirements:**
No additional ones.

- End of EU-Type Examination Certificate -

This certificate may only be reproduced without any change, schedule included.
Excerpts or changes shall be allowed by the TÜV NORD CERT GmbH

IECEx Certificate of Conformity

INTERNATIONAL ELECTROTECHNICAL COMMISSION
IEC Certification System for Explosive Atmospheres

for rules and details of the IECEx Scheme visit www.iecex.com

Certificate No.:	**IECEx TUN 22.0006X**	Page 1 of 5	Certificate history:
Status:	**Current**	Issue No: 0	
Date of Issue:	2023-10-04		
Applicant:	**NIVUS GmbH** Im Täle 2 75031 Eppingen **Germany**		
Equipment:	**Data logger NivuLink Micro II type NLG02xxxxExx**		
Optional accessory:			
Type of Protection:	**Equipment protection by intrinsic safety 'ib'; Equipment protection by increased safety "eb"; Equipment protection by encapsulation "mb"**		
Marking:	Ex eb ib [ib] mb IIB T4 Gb		

Approved for issue on behalf of the IECEx Certification Body: **Andreas Meyer**

Position: **Deputy Head of the IECEx Certification Body**

Signature: (for printed version)

Date: (for printed version)

TÜVNORD Digital unterschrieben von Meyer Andreas Datum: 2023.10.04 15:51:39 +02'00'

1. This certificate and schedule may only be reproduced in full.
2. This certificate is not transferable and remains the property of the issuing body.
3. The Status and authenticity of this certificate may be verified by visiting www.iecex.com or use of this QR Code.

Certificate issued by:

TÜV NORD CERT GmbH
Hanover Office
Am TÜV 1, 30519 Hannover
Germany

TÜV NORD

IECEx Certificate of Conformity

Certificate No.: **IECEx TUN 22.0006X** Page 2 of 5

Date of issue: 2023-10-04 Issue No: 0

Manufacturer: **NIVUS GmbH**
Im Täle 2
75031 Eppingen
Germany

Manufacturing locations: **NIVUS GmbH**
Im Täle 2
75031 Eppingen
Germany

This certificate is issued as verification that a sample(s), representative of production, was assessed and tested and found to comply with the IEC Standard list below and that the manufacturer's quality system, relating to the Ex products covered by this certificate, was assessed and found to comply with the IECEx Quality system requirements.This certificate is granted subject to the conditions as set out in IECEx Scheme Rules, IECEx 02 and Operational Documents as amended

STANDARDS :
The equipment and any acceptable variations to it specified in the schedule of this certificate and the identified documents, was found to comply with the following standards

IEC 60079-0:2017 Edition:7.0 — Explosive atmospheres - Part 0: Equipment - General requirements

IEC 60079-11:2011 Edition:6.0 — Explosive atmospheres - Part 11: Equipment protection by intrinsic safety "i"

IEC 60079-18:2017 Edition:4.1 — Explosive atmospheres - Part 18: Protection by encapsulation "m"

IEC 60079-7:2017 Edition:5.1 — Explosive atmospheres - Part 7: Equipment protection by increased safety "e"

This Certificate **does not** indicate compliance with safety and performance requirements other than those expressly included in the Standards listed above.

TEST & ASSESSMENT REPORTS:
A sample(s) of the equipment listed has successfully met the examination and test requirements as recorded in:

Test Report:

DE/TUN/ExTR22.0005/00

Quality Assessment Report:

DE/TUN/QAR13.0011/09

IECEx Certificate of Conformity

Certificate No.: **IECEx TUN 22.0006X** Page 3 of 5

Date of issue: 2023-10-04 Issue No: 0

EQUIPMENT:
Equipment and systems covered by this Certificate are as follows:

Description:

The data logger NivuLink Micro II type NLG02xxxxExx is a stand-alone data logger with gateway function. It is suitable for the transmission of measurement data to a web portal or process control system.

The wireless data transmission is via an integrated 4G LTE GPRS modem with GPS functionality. Optionally, the possibility of a LoRa data transmission also exists.

Type code; Electical and Thermala data: Refer to the Attachment to IECEx TUN 22.0006X issue No.0

SPECIFIC CONDITIONS OF USE: YES as shown below:
1. The data logger NivuLink Micro II type NLG02xxxxExx has to be installed and used in such a way that electrostatic charging from operation, maintenance, and cleaning is excluded.

2. If the data logger NivuLink Micro II type NLG02xxxLExx and the data logger NivuLink Micro II type NLG02xxxKExx are installed in hazardous area, they have to be protected from UV radiation.

3. The connecting and disconnecting of the "SIM card" is only permitted if no explosive atmosphere exists.

The connection to the "USB socket" is only permitted outside the potentially explosive atmosphere.

4. Change of the supply batteries is only permitted outside of the explosion hazardous area.

5. Only permissible cells according to the manufacturer´s operating instructions are allowed to be used.

6. The data logger NivuLink Micro II type NLG02xxxLExx and the data logger NivuLink Micro II type NLG02xxxAExx have to be installed in such a way that a mechanical hazard can be excluded.

7. For reading out the measured values, an industrial USB Isolator (e.g. type FIT0860) with 1500 V isolation voltage is provided between the USB interface of the device (laptop/PC,..) connected to the data logger and the USB socket of the data logger.

The power supply of the connected device (laptop/PC,...) is to be connected to a power supply unit with SELV/PELV protective extra-low voltage.

A battery-powered laptop/PC is considered as SELV/PELV device.

IECEx Certificate of Conformity

Certificate No.: **IECEx TUN 22.0006X** Page 4 of 5

Date of issue: 2023-10-04 Issue No: 0

Equipment (continued):

Data logger NivuLink Micro II type NLG02xxxxExx

IECEx Certificate of Conformity

Certificate No.: **IECEx TUN 22.0006X** Page 5 of 5

Date of issue: 2023-10-04 Issue No: 0

Additional information:
Refer to the Attachment to IECEx TUN 22.0006X issue No.0

Annex:

Attachment to IECEx TUN 22.0006X issue No.0 .pdf

TÜV NORD CERT GmbH
Hannover Office
Am TÜV 1
30519 Hannover
Germany

TÜV NORD
Zertifizierung

Page 1 of 4
Attachment to IECEx TUN 22.0006X issue No.: 0

General product information:
Description:
The data logger NivuLink Micro II type NLG02xxxxExx is a stand-alone data logger with gateway function. It is suitable for the transmission of measurement data to a web portal or process control system.

The wireless data transmission is via an integrated 4G LTE GPRS modem with GPS functionality. Optionally, the possibility of a LoRa data transmission also exists.

Type code:
NLG02 x x x x x xx

Number of inputs:
1: 1 input
4: 4 inputs
Data transmission:
G: LTE
L: LoRa
Power supply:
B: Battery
O: without Battery
R: Battery pack
Enclosure:
S: Enclosure standard version Bopla plastic PC with plastic LED screw (Not for Ex-uses).
A: Data logger aluminium enclosure from Bopla (round seal) without LED screw made of stainless steel.
L: Data logger Aluminium enclosure from Bopla (round seal) with stainless steel LED screw.
K: Data logger POM-C plastic enclosure (round seal) with M5 hole at RGB LED position (filled with epoxy resin)
E: Ex version for use in Ex zone 1
0: No Ex device
Options:
hardware or software options

P17-F-610 Rev. 01 / 06.18

TÜV NORD CERT GmbH
Hannover Office
Am TÜV 1
30519 Hannover
Germany

TÜV NORD Zertifizierung

Page 2 of 4
Attachment to IECEx TUN 22.0006X issue No.: 0

Electrical data:

Power supply (Internal primary cells)	In type of protection increase safety Ex eb IIB U_n = 10.8 V d.c. Powered via 3 x 3.6 V / 13 Ah LSH20-batteries or 3 x 3.6 V / 14.5 Ah UHR-ER34615-X-batteries
Alternative external supply (Terminal X3)	In type of protection intrinsic safety Ex ib IIB Only for connection to certified intrinsically safe circuits. Maximum values: U_i = 11.7 V I_i = 1.25 A P_i = 14.6 W The effective internal capacitances and inductances are negligibly small.
Relay output (Terminals X1.1(NO); X1.10(NC); X.1.2(COM))	In type of protection intrinsic safety Ex ib IIB. Only for connection to certified intrinsically safe circuits. Maximum values: U_i = 26 V I_i = 100 mA P_i = 2.6 W The effective internal capacitances and inductances are negligibly small.
RS-485 Interface output (Terminals X1.3(RxTx+); X1.11(GND); X1.12(RxTx-))	In type of protection intrinsic safety Ex ib IIB with following maximum values: U_o = 5.88 V I_o = 150.1 mA P_o = 221.9 mW Characteristic line: Linear The effective internal capacitances and inductances are negligibly small.

The maximum permissible values for the external inductance L_o and the external capacitance C_o can be taken from the following table:

Ex ib IIB	L_o [mH]	14	5	0.5	0.1	0.002
	C_o [µF]	7.3	12	23	39	1000

RS-485 Interface input (Terminals X1.3(RxTx+); X1.11(GND); X1.12(RxTx-))	In type of protection intrinsic safety Ex ib IIB. Only for connection to certified intrinsically safe circuits. Maximum values: U_i = 7.21 V I_i = 176 mA P_i = 317.24 mW The effective internal capacitances and inductances are negligibly small.

P17-F-610 Rev. 01 / 06.18

TÜV NORD CERT GmbH
Hannover Office
Am TÜV 1
30519 Hannover
Germany

TÜV NORD Zertifizierung

Universal input
1: (X1.4(PWR CH1); X1.5(INP CH1); X1.6(GND))
2: (X1.7(PWR CH2); X1.8(INP CH2); X1.9(GND))
3: (X1.13(PWR CH3); X1.14(INP CH3); X1.15(GND))
4: (X1.16(PWR CH4); X1.17(INP CH4); X1.18(GND))

In type of protection intrinsic safety Ex ib IIB with following maximum values per universal input:

U_o = 25.09 V
I_o = 90.9 mA
P_o = 570 mW
Characteristic line: Linear
The effective internal capacitances and inductances are negligibly small.

The maximum permissible values for the external inductance L_o and the external capacitance C_o can be taken from the following table:

Ex ib IIB	L_o [mH]	26	2	1	0.5	0.2
	C_o [µF]	0.52	0.53	0.61	0.72	0.83

The USB interface circuit (X11), the antenna circuit BU1 with GPRS and LoRa module and the SIM-card slot circuit (X14) are in type of protection intrinsic safety Ex ib IIB.
For reading out the measured values, an Industrial USB Isolator e.g. type FIT0860 with 1500 V isolation voltage is provided between the USB interface of a laptop/PC and the USB socket of the data logger.
The maximum permissible connectable reactances for the SIM card:
Capacitance C_o = 200 µF
Inductance L_o = negligibly small.

The different intrinsically safe circuits and the power supply via internal primary cells are galvanically connected to each other.

Thermal data:
Permissible ambient temperature range during operation: -20 °C ≤ Ta ≤ +50 °C

TÜV NORD CERT GmbH
Hannover Office
Am TÜV 1
30519 Hannover
Germany

TÜV NORD
Zertifizierung

Attachment to IECEx TUN 22.0006X issue No.: 0

Specific Conditions of Use:

1. The data logger NivuLink Micro II type NLG02xxxxExx has to be installed and used in such a way that electrostatic charging from operation, maintenance, and cleaning is excluded.
2. If the data logger NivuLink Micro II type NLG02xxxLExx and the data logger NivuLink Micro II type NLG02xxxKExx are installed in hazardous area, they have to be protected from UV radiation.
3. The connecting and disconnecting of the "SIM card" is only permitted if no explosive atmosphere exists.
   The connection to the "USB socket" is only permitted outside the potentially explosive atmosphere.
4. Change of the supply batteries is only permitted outside of the explosion hazardous area.
5. Only permissible cells according to the manufacturer`s operating instructions are allowed to be used.
6. The data logger NivuLink Micro II type NLG02xxxLExx and the data logger NivuLink Micro II type NLG02xxxAExx have to be installed in such a way that a mechanical hazard can be excluded.
7. For reading out the measured values, an industrial USB Isolator (e.g. type FIT0860) with 1500 V isolation voltage is provided between the USB interface of the device (laptop/PC,..) connected to the data logger and the USB socket of the data logger.
   The power supply of the connected device (laptop/PC,...) is to be connected to a power supply unit with SELV/PELV protective extra-low voltage.
   A battery-powered laptop/PC is considered as SELV/PELV device.